COMBIVERT

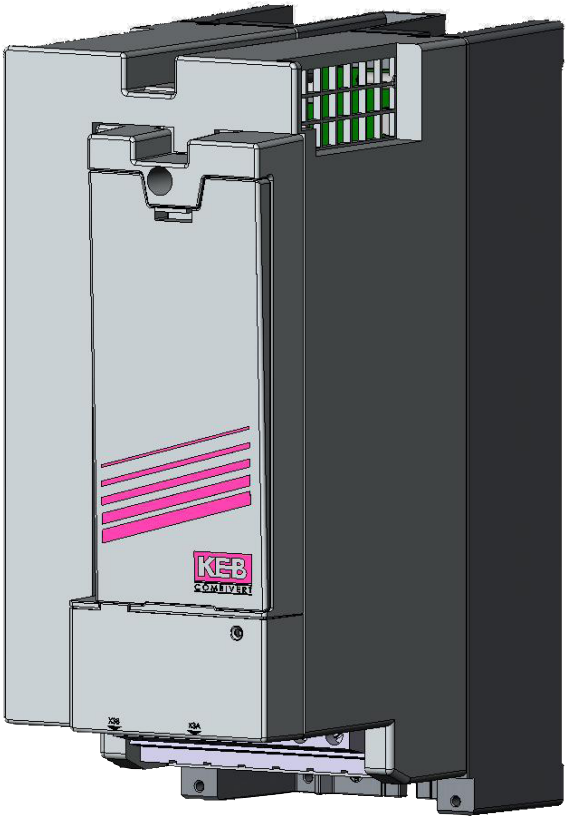

R6

US INSTRUCTION MANUAL

Type R6-S

Power Supply and Regeneration Unit

Size 15/19

Version 1.2

CE

c UL us LISTED

00.R6.SUB-K000

KEB

07/2007

This instruction manual describes the power supply and and recovery unit KEB COMBIVERT R6-S series. Before working with the unit the user must become familiar with it. This especially applies to the knowledge and observance of the following safety and warning indications. The pictographs used in this instruction manual have following meaning:

Danger
Discharge Time
Caution

Pay Attention
Important
Warning

Information
Help
Tip

1. Introduction

1.1 Preface

First we would like to welcome you as a customer of KEB and congratulate you on the purchase of this product. You have decided on a product on the highest technical innovation.
The enclosed documents as well as the specified hardware and software are developments of KEB. KEB has created these documents, hardware and software and they are to the best of KEB's knowledge error free. KEB reserves the right to change specifications without prior notice. This statement is not exclusive.

The icons used throughout this document have following significance:

Danger
Caution
Discharge Time

Pay Attention
Important
Warning

Information
Help
Tip

1.2 Product description

This instruction manual describes the power supply and recovery unit KEB COMBIVERT R6-S. The COMBIVERT R6-S has the following technical features.

As a supply unit
- converts a three-phase input voltage into DC voltage.
- supplies a single KEB frequency inverter or multiple unit via DC interconnection.
- can be connected in parallel, if higher supply power is required.
- increases the stability of the DC Bus voltage in shared DC Bus applcaitions.

As a recovery unit
- returns the excess energy from generator operation to the utility supply system.
- reduces the net energy demand.
- reduces the heat dissipation.
- is environmentally friendly.
- replaces braking resistor and braking transistor.
- is cost saving and space saving.

The COMBIVERT R6-S is generally protected against over current, ground fault and high temperature. Appropriately dimensioned DC fuses protect the DC Bus circuit against short-circuit. The following accessories are necessary for operation with the COMBIVERT R6-S:
- Line commutation choke
- HF filter (for observance of European EMC standard)

1.3 Specified application

The COMBIVERT R6-S serves exclusively for the supply of frequency inverters with DC input and/or regeneration of excess energy into the line supply system. The operation of other electrical loads is prohibited and can lead to malfunctions or destruction of the unit.

1.3.1 Standard operation

If the DC Bus voltage increases to a value above the peak value of the line voltage (negative power), regeneration of the current to the line occurs automatically. The line voltage is measured by the R6 unit. Regeneration occurs in a square-wave format, whereby the current flow period corresponds to the line frequency and the normal conduction times of a standard 6 pulse bridge rectifier circuit. Regeneration stops if the DC bus voltage decreases below the line supply peak voltage (positive power).

1.3.2 Abnormal operation

When exceeding the permissible limit values for voltage, current or temperature the current flow between DC link and the line is blocked during regeneration. An appropriate error message is also displayed. When acting as a supply, the unit must be disconnected from the supply system in case of over current as current flow can not be limitedby the unit itself in when in this mode of operation.
With factory settings, the modulation is switched off in case of a line phase loss and/or a synchronisation line failure. The error message E.nEt is displayed.
Special adjustments from KEB are necessary if the modulation and/or the standard operation should start again within a defined time in case of return of power supply.

1.4 Unit identification

1 9 . R 6 . s 3 E - 9 0 0 A

Type	A:	Heat sink (standard)	B: Flat Heatsink
Design	0:	default	
reserved	0:	default	
Voltage	R:	3-ph.; 180…550 V; AC	
Housing	E		
Options	0:	without pre-charging	3: Pre-charging, DC-fuses
	1:	pre-charging	
Control	S:	1B.R6	
Series	R6		
Unit size	15,19		

2. Safety Instructions

2.1 General instructions

Electric Shock	The COMBIVERT R6 power supply and recovery unit contains dangerous voltages which can cause death or serious injury. The COMBIVERT R6 can be adjusted such that energy is returned to the line supply system even in case of power failure during generator operation. Therefore dangerous high voltage can exist in the unit even after disconnection from the line supply system. **Before working with the unit always verify the voltage has dropped to a safe value by measuring both the DC bus voltage and the AC line voltage at the R6 unit.** Care should be taken to ensure correct and safe operation and to minimise risk to personnel and equipment.

Only Qualified Electrical Personnel	All work from the transport, to installation and start-up as well as maintenance may only be done by qualified personnel (IEC 364 and/or CENELEC HD 384 and IEC-Report 664 and note national safety regulations). According to this manual qualified personnel means those who are able to recognise and judge the possible dangers based on their technical training and experience as well as those with knowledge of the relevant standards and who are familiar with the field of power transmission or conversion.

Observe Standards	The COMBIVERT R6 must not be started until it is determined that the installation complies with 89/392/EEC (machine directive) as well as the EMC-directive (89/336/EEC)(note EN60204), the US - NEC, and the OSHA machine safety code. The COMBIVERT R6 meets the requirements of the Low-Voltage Directive 73/231/EEC. The harmonized standard of the series EN 61800-5-1 (VDE 0160) is used. This is a product of limited interference susceptibility in accordance with IEC 61800-3. This product may cause radio interference in residential areas. In this case the installer/operator may need to take corresponding measures.

2.2 Transport, storage and installation

The storage and transport of the COMBIVERT must be done in the original packing. It is to be protected against humidity and excessive cooling and thermal effects. Long-distance transportation must be carried out in the original packing. It is to be secured against physical impact and shock during transport. Verify the packaging for signs of mishandling before removal from the packaging. Contact the shipper in case of damage. After removing the final packing, the COMBIVERT R6 must be mounted on a stable mounting base.

Protect Against Accidental Contact	The COMBIVERT R6 must be protected against abnormal operation. Components and covers must not be bent or moved as this may affect insulation distances. The units contain electrostatically endangered components which can be destroyed by inappropriate handling. For that reason the contact of electronic components and circuit boards is to be avoided. The equipment must not be switched on if it is damaged as it may no longer comply with mandatory standards. Make sure during installation there is at least the minimum clearance and enough cooling. Climate conditions must be observed in accordance with this instruction manual.

Hot Surface	Heatsinks can reach high temperatures, which can cause burns when touched. A warning notice "hot surface" must be mounted on the machine control panel if direct physical contact with the heatsink can not be avoided.

2.3 Electrical connection

Note Capacitor Discharge Time	Before any installation and connection work, the system must be switched off and secured. After switch off, the intermediate circuit capacitors are still charged with high voltage for a short period of time. The unit can be worked on, after it has been switched off for 5 minutes.

Secure Isolation	The terminals of the control terminal strip are securely isolated in accordance with EN 61800-5-1. With existing or newly wired circuits the person installing the units or machines must ensure the EN requirements are met. When used together with frequency inverters that are not isolated from the supply circuit, all control lines must secured by other protective measures (e.g. double insulation or shielded, earthed and insulated).

Voltage With Respect To Ground	Connection of the COMBIVERT R6 is only permissible on symmetrical networks with a maximum line voltage (L1, L2, L3) with respect to ground (N/GND) of 317V. An isolating transformer must be used for networks which exceed this value! The unit may be damaged if this is not observed.

Grounded Delta Supply	The COMBIVERT R6 can be connected to power systems with grounded line phase (e.g. grounded delta power systems). This this case, the following exceptions apply: • the control system is no longer regarded as “securely isolated circuit”, further protection measures are therefore required. • with this type of power system, the max. voltage phase / ground must not exceed 550 V. • external DC fuses on the DC bus are necessary for operation at 400...480 V. Use the COMBIVERT R6-S without internal DC fuses.

Only Fixed Connection	The COMBIVERT R6 is designed for fixed connection only as high frequency ground leakage currents of > 3.5 mA may occur especially when using EMI filters. It is therefore necessary to use a ground conductor with a section of at least a #4 AWG (16mm^2) copper conductor or a second ground conductor in compliance with EN 61800-5-1. Ground point-to-point with the shortest connection possible to the main ground point in the system (avoid ground loops).

Insulation Measurement	When doing a high votlage insulation measurement in accordance with VDE 0100 / Part 620, the power semiconductor of the unit and existing radio interference filters must be disconnected because of the danger of destruction. This is permissible in compliance with the standard, since all units are given a high voltage test during the quality testing at KEB in accordance with EN 50178.

Different Ground Potentials	When using components without isolated inputs / outputs, it is necessary that equal potential bonding exist between the components to be connected (e.g. through the equalizer). Disregard can cause destruction of the components by the equalizing currents.

Prevent Disturbances	Trouble-free and safe operation of the COMBIVERT R6 is only guaranteed when the connection instructions below are strictly followed. Incorrect operation or damage may result from incorrect installation. • Pay attention to the line supply voltage. • Install power cables and control cables separately (>6.0 inches (15 cm) separation). • Use shielded / twisted control lines. Connect the shield at one end to the COMBIVERT R6-S GND terminal! • Only use suitable circuit elements to control the logic and analog inputs, whose contacts are rated for extra-low voltages. • The heatsink of the COMBIVERT R6 must be well grounded. Schields of large power cables must be directly and securely attached to both the inverter GND terminal and the motor ground terminal. Remove paint finish where necessary. • Ground the cabinet or the system with the shortest connection to the main ground point (avoid ground loops) • **Use exclusively the line commutation choke specified by KEB.** • The average value of the supplied DC current may not exceed the maximum DC current. • If several frequency inverters are connected to the COMVIBERT R6, the maximum permissible DC bus capacities of all connected frequency inverters must be considered during supply operation (see technical data). • A ferrit ring must be installed over both + and - DC bus connections to the COMBIVERT R6 unit to limit common mode noise on the DC bus.

Automatic Restart	The COMBIVERT R6 can be adjusted in such a way that the unit will restart automatically after an error (e.g. single phase brown out or loss). System design must take this into account. If appropriate, additional monitoring or protective features should be added where necessary.

Not Short-Circuit Proof (Supply)	The COMBIVERT R6 is not short-circuit proof as a power supply input! If the I2t-protection is adapted with a class gR fuse, a conditional protection at supply input is possible. If necessary the short-circuit protection at DC output is ensured by internal class aR fuse.

Conditionally Short-Circuit Proof (Regen)	The COMBIVERT R6 is conditionally short-circuit proof (EN 61800-5-1 / VDE 0160). After resetting the internal protection devices, the function as directed is guaranteed. Exception: • A ground fault or short-circuit frequently occurring at the output, can lead to damage to the unit.

Cyclic Turn On and Turn Off	With applications requiring the COMBIVERT R6 to be switched on and off cyclically, maintain an off-time of at least 5 min. If you require shorter cycle times please contact KEB.

GFI (Ground Fault Interrupt Circuit-Breaker)	If personnel protection of the system against ground fault is required, the COMBIVERT R6-S must be protected according to EN 61800-5-1: • 3-phase inverters (with B6 bridge-connected rectifier) by RCMA's with separation (use privileged) or RCD's type B (all-current sensitive GFI's) The tripping current should be 300mA or more, in order to avoid a premature triggering by leakage currents (about 200mA. Dependent on the load, the length of the motor cable and the use of a radio interference filter, substantially higher leakage current can occur). The connection instructions from the manufacturer and the valid local requirements must be observed. Dependent on the available supply type (TN, IT, TT) further protective measures are necessary in accordance with VDE Part 410 4(Part 4; Chapter 41). For example, with TN-mains this protection is made with overcurrent protective devices, with IT-mains it is insulation monitoring with a pulse-code measuring method. A protective separation can be used with all mains forms as long as the required power and cable lengths permit this. The person setting up the unit must present proof of compatibility before installing the converter!

Circuit diagram of low voltage distribution (principle of the protective elements)

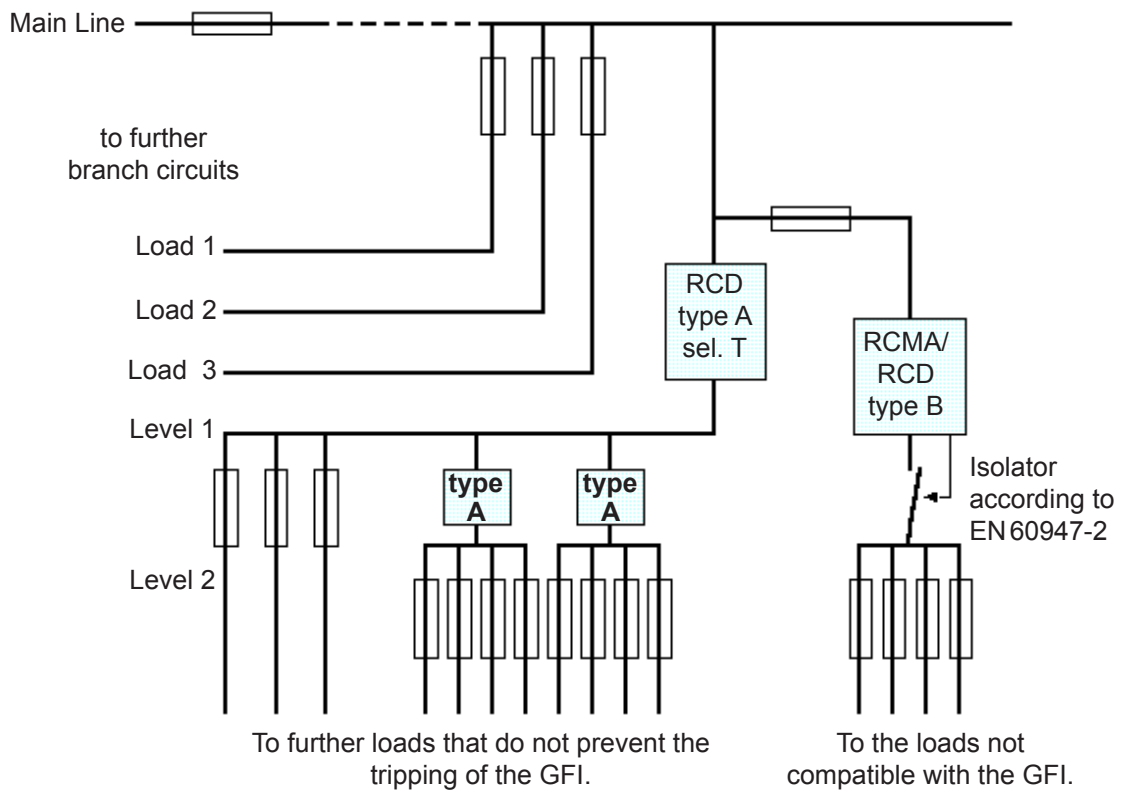

2.4 EMC instructions

The COMBIVERT R6-S represents electrical equipment designed for use in industrial and commercial installations. In accordance with the EMC directive 89/336/EEC, it is not mandatory to mark these devices as they represent components to be further handled by the respective machine and system manufacturer and are not operable independently according to the EMC directive. The person installing / operating the machine / system is obliged to prove the protective measures demanded by the EMC directive are complied with. The prescribed ratings can usually be complied with when using the radio interference voltage filters as specified by KEB, and when observing the following measures and installation guidelines.

2.5 EMC conforming installation

The COMBIVERT R6 is designed to be used in a second environment as defined in EN 61800-3 (unit with its own supply transformer). Take additional measures when using it in the first environment (residential and commercial area connected to public low-voltage line)!

- Install the control cabinet or system in an appropriate and correct manor (see chapter "control cabinet installation")
- To avoid coupled noise, separate during installation high voltage supply lines, motor lines, control and data lines (low-voltage level < 48V) and leave a space of at least 6.0 inches, 15 cm between them.
- In order to maintain low-resistance high frequency connections, grounding and shielding, as well as other metallic connections (e.g. mounting plate, installed units) must be made with bare metal to metal contact with the mounting plate, over as large a surface area as possible. Use ground conductors with a section as large as possible, minimum #4 AWG (16mm^2) or use thick ground straps.
- Only use shielded cable with copper or tin-plated braid, since steel braid is not suitable for high frequency ranges. The shield must always be connected to the ground bare on the unit or fastened with clamps to the bare metal of the sub mounting plate. Do not connect the shield using the drain wires alone, this reduces the effectiveness of the shield by 70%!
- If external interference suppression filters are used, then these must be installed as close as possible <12 inches (30 cm) to the interference source and must be in metal to metal contact with the sub mounting plate, over as large a surface area as possible.
- Always equip inductive control elements (contactors, relays etc.) with suppressors such as varistors, RC-elements or diodes.

All connections must be kept as short as possible and as close as possible to the ground plane. Free floating cables act as active and passive antenna.

- Keep connection cables straight (do not loop). Tie all spare unassigned wires at one end to the ground.
- The twisted pair cables should be used when the conductors are not shielded in order to dampen common-mode noise.
- The cable for phase synchronisation between the commutation choke and COMBIVERT R6-S may not exceed a line length of 39 inches (1 m) .
- Further information can be found on the internet, see "www.kebamerica.com".

3. Technical Data

3.1 Power data

Unit size			15	19
Housing size			E	
Phases			3	
Rated voltage	*)	[V]	480 (230)	
Supply voltage		[V]	180…550 ±0 %	
Line frequency		[Hz]	50 / 60 ±2	
Regenerative operation				
Output rated power	*)	[kVA]	18 (10.5)	45 (26)
Rated active power	*)	[kW]	17 (10)	42 (23)
Max. power output	*)	[kVA]	27 (15.5)	67.5 (39)
Max. active power	*)	[kW]	25.5 (15)	63 (34.5)
Regenerative rated current		[A_{AC}]	26	65
Regenerative DC current		[A_{DC}]	32	80
Over load current (E.OL) 60 s	1)	[A_{AC}]	39	97.5
Max. regenerative DC current 60 s		[A_{DC}]	48	120
Power supply operation				
Output rated power	*)	[kVA]	18 (10.5)	48.5 (28)
Rated active power	*)	[kW]	16 (10)	44.5 (25.5)
Max. power output	*)	[kVA]	27 (15.5)	72.5 (42)
Max. active power	*)	[kW]	24 (14.5)	67 (38)
Rated supply current	2)	[A_{AC}]	26	70
DC supply current		[A_{DC}]	32	87[3)]
Over load current (E.OL)		[A_{AC}]	39	105
Max. DC supply current		[A_{DC}]	48	130
OC-tripping current		[A_{AC}]	42	112
DC output voltage	*)	[V_{DC}]	420…780 (250…370)	
Max. permissible DC bus capacitance	*)	[µF]	5000 (21500)	5000 (21500)
Max. permissible line fuse UL Class RK5 (class gR)		[A]	40	100
I^2t Peak current ratings of the semiconductor		[A^2s]	1200	4500
Internal DC fuse class aR Siemens Sitor			3NC2240	3NC2200
Supply conductor cross section (min for terminal)		[AWG]	#18 (0.5mm²)	#14 (1.5mm²)
Supply conductor section (max)		[AWG]	#6 (10mm²)	#3 (25mm²)
DC conductor cross section (min for terminal)		[AWG]	#18 (0.5mm²)	#14 (1.5mm²)
DC conductor cross section (max)		[AWG]	#6 (10mm²)	#3 (25mm²)
Power loss at nominal operation		[W]	200	470
Max. heat sink temperature		[°C]	70	88

*) *Use bracketed values for operation at 230 V.*

1) *The over load time is specified for 1 minute. The overload period is 300 seconds. This corresponds to duty class 2 EN 60146-1-1.*

2) *The current ratings are based on a displacement power factor of g=0.95. The displacement power factor or the effective value of the input current is dependent on load and line supply conditions. With uncontrolled diode bridge rectifiers, the power factor can be set to 1.0, so the value of the fundamental frequency components is equal to the value of the displacement power factor.*

3) *For installations according to the UL 508C standard and DC supply currents > 85A, the DC bus connection must use both ++ and -- terminals with a second parallel conductor.*

4) *The wire gauge is based on the maximum fuse rating, copper wire with a 75°C insulation rating, THHW or equivalent. If branch circuit protection is selected based on the continuous current below the rated value, the wire size could be reduced.*

⚠ The units are not short circuit proof without correctly dimensioned fuses

⚠ Exceeding the maximum DC bus capacitance can lead to failure.

⚠ A load disconnection in the DC bus circuit may only occur after the operating status „Standby" is achieved.

ℹ Installation altitude maximum 6,562 ft (2000 m). With installation altitudes over 3280 ft (1000 m) a de-rating of 1 % per 328 ft must be taken into consideration.

3.2 Operating Environment Specifications

		Standard	Classification	Specifications
Definition According To		EN 61800-2		Inverter Product Standard: Measurement specs.
		EN 61800-5-1		Inverter Product Standard: General Safety
Operating Altitude				2000m above sea level with 1% power derating per 100m above 1000m
Specifications During Operation				
Environment	Temperature	60721-3-3	3K3	Range -10C ...45 °C (from 45°C to max. 55°C a power derating of 5% per 1°C can be applied.)
	Humidity		3K3	5...85% (no condensation)
Mechanical	Vibration	Railroad	EN50155	Max. oscilation amplitude 1 mm (5…13 Hz) max. acceleration amplitude 7 m/s² (13…200 Hz), sinewave
		Germ.Loyd	Part 7-3	
		EN60721-3-3	3M1	
Contamination		Gas	3C2	
		Partical	3S2	
Specifications During Transport				
Environment	Temperature	60721-3-2	2K3	Range -25 ...70 °C
	Humidity		2K3	(no condensation)
Mechanical	Vibration	Railroad	EN50155	Max. oscilation amplitude 3.5 mm (2…9 Hz) max. acceleration amplitude 15 m/s² (9…200 Hz), sinewave
		Germ.Loyd	Part 7-3	
		EN60721-3-3	2M1	
	Shock	EN60721-3-3	2M1	max. 100m/s²; 11msec
Contamination		Gas	2C2	
		Partical	2S2	
Specifications During Storage				
Environment	Temperature	60721-3-2	1K4	Range -25 ...70 °C
	Humidity		1K3	(no condensation)
Mechanical	Vibration	Railroad	EN50155	Max. oscilation amplitude 1 mm (5…13 Hz) max. acceleration amplitude 7 m/s² (13…200 Hz), sinewave
		Germ.Loyd	Part 7-3	
		EN60721-3-3	1M1	
	Shock	EN60721-3-3	1M1	max. 100m/s²; 11msec
Contamination		Gas	1C2	
		Partical	1S2	
Construction / protection		EN60529	IP20	Chassis
Environment Class		IEC 664-1		Pollution degree 2
Definition According To		EN 61800-3		Inverter Product Standard: EMI
EMI disturbance creation (See instruction manaul)				
Conducted disturbance		EN 55011	C3	Level A (Level B optional)
Radiated disturbance		EN55011	C3	Level A
EMI Suseptibility				
ESD		EN 61000-4-2	8kV	AD (air charge) and CD (contact charge
Burst - Control wires and bus com.		EN 61000-4-4	2kV	
Burst - Line supply		EN 61000-4-4	4kV	
Surge - Line supply		EN 61000-4-5	1 / 2kV	Phase to phase / Phase to ground
EMF		EN6100-4-3	10 V/m	
Line supply fluctuations; colapse		EN 61000-2-1		+10 %, -15 %; 90 %
Line voltage symitry / line frequency variation		EN 61000-2-4		3% / 2%

3.3 Accessories

Unit size	15	19
Rated voltage	480 V (can also be used at 230V)	
Commutation choke	15.Z1.B05-1000	19.Z1.B05-1000

3.4 Options

Unit size	15	19
Line EMI filter	15.R6.T60-1001 according to EN 55011 class A	19.R6.T60-1001 according to EN 55011 class A
Ferrit Rings	See section 3.5.5	See section 3.5.5
Harmonic filter 8 % THD	15.Z1.C04-1002 (230 V on request)	19.Z1.C04-1002 (230 V on request)
Harmonic filter 15 % THD	on request	on request
Internal DC fuses	600 V / 50 A (part number 00.90.25H-3459)	600 V / 125 A (part number 00.90.25H-3559)
Operators	Digital operator, Interface operator	
Bus operators	CAN, ProfiBus, InterBus, Ethercat, Ehternet, Sercos, ModBus, Devicenet, HSP5	

3.5 Dimensions and weights

3.5.1 COMBIVERT R6-S

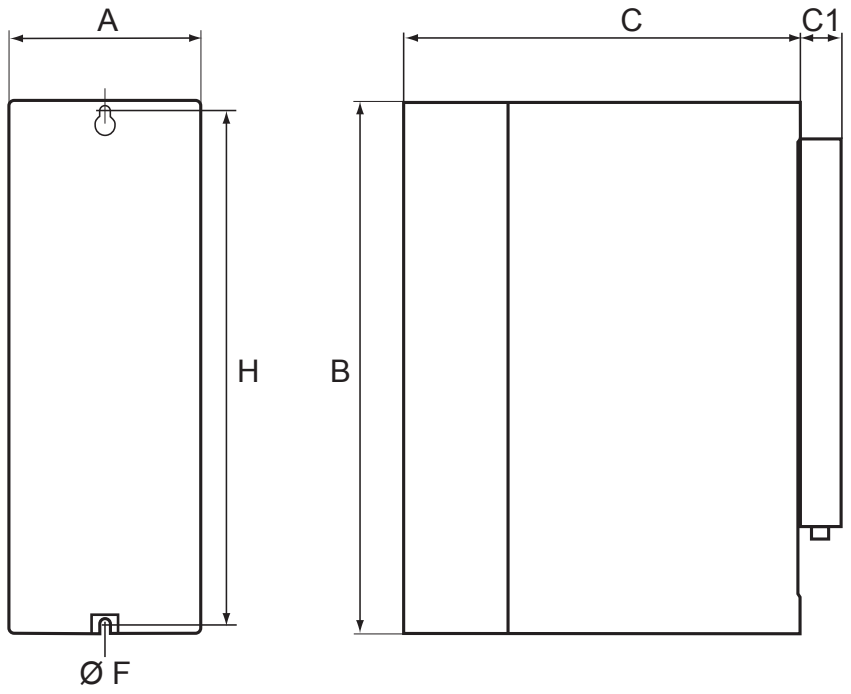

Housing	A	B	C	C1	F	H	Weight
E	5.12	11.4	8.19	0.55	0.27	10.8	12.4 lb
C1 with operator	Values are in inches						

3.5.2 Commutation Choke

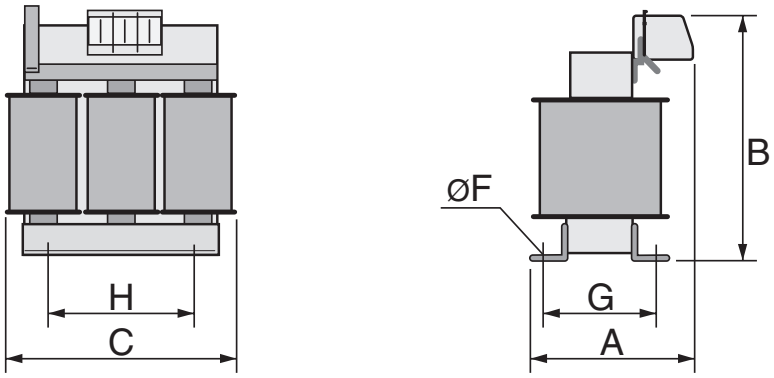

Part number	A	B	C	F	G	H	Weight
15.Z1.B05-1000	2.95	9.45	7.09	0.21	2.13	6.54	12.4 lb
19.Z1.B05-1000	4.53	11.4	9.57	0.28	3.35	8.86	30.2 lb

3.5.3 HF sub-mount filter

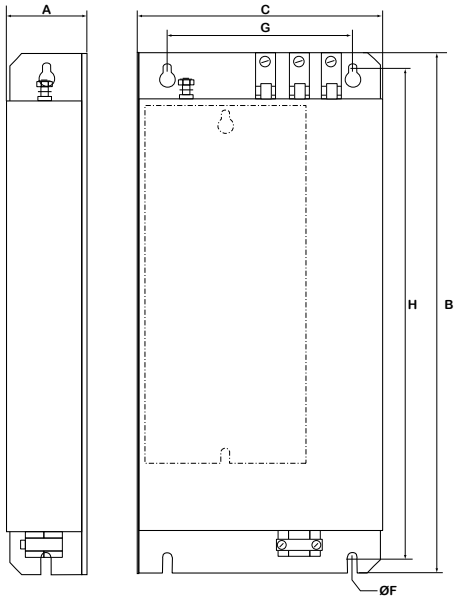

Part number	A	B	C	F	G	H	Weight
15.E4.T60-1000	1.97	13.9	5.14	0.28	3.94	13.0	4.4 lb
19.R6.T60-1001	2.56	16.6	7.80	0.28	5.91	15.6	16.8 lb

3.5.4 Synchronization Cable

Part number	00.F5.0C3-4010
Length	39.4 in (1m)

3.5.5 Ferrit Rings

Ferrite rings are required to minimize electrical disturbances on the DC bus connections between the inverter(s) and the COMBIVERT R6 unit. The ferrite rings are to be install over both the ++ and -- DC bus conductors. Do not pass ground conductors through the ferrite rings. The Ferrite rings are selected based on the size of the conductor and the inner diameter of the ring.

Part Number	Overall dimensions in mm	Opening cross section in mm
0090396-2621	R42/26/18	24.9
0090390-5241	R56/32/18	29.5
0090395-3820	R63/38/25	36.0
0090395-5222	R87/54/30	54.5
0090395-5520	R102/66/15	64.5

4. Installation

4.1 EMC-compatible control cabinet installation

1	Line fuse
2	Line contactor
3	Harmonic filter
4	COMBIVERT R6
5	HF sub-mounting filter
6	Commutation choke
7	Frequency inverter
8	If necessary, external DC fuses
9	Motor cables
10 A	Protective ground on the sub mounting plate power circuit
10b	Protective ground on the mounting plate control circuit
10c	Equal potential bonding with the housing earth
11	Line connection power circuit
11 A	Line connection control circuit
12	Control circuit conductors
⏚	Large area contact on the sub mount plate

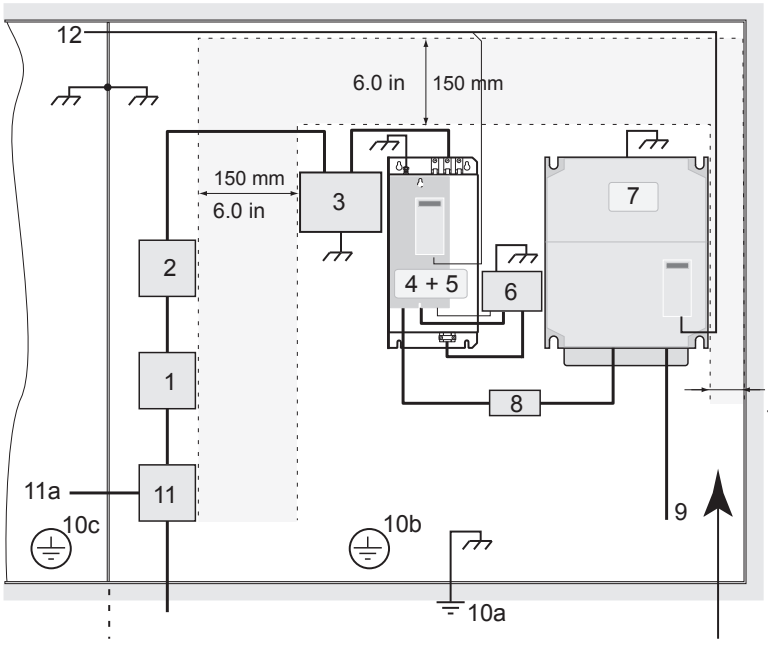

Control circuit Power circuit Direction of the cooling fins

4.2 Installation instructions

- Install and ground the COMBIVERT R6 on a stationary system.
- Mist, water, or other liquids and vapors must not be allowed to permeate the device.
- Allow for sufficient heat dissipation if installed in a dust-proof housing.
- When operating the COMBIVERT in explosion proof environment, install the unit in an appropriate enclosure in accordance with the local regulations and codes.
- Protect the COMBIVERT against conductive and aggressive gases and liquids.
- The conductors to the R6-S commutation choke must be limited to 39 inches (1 m).

4.3 Connection of the COMBIVERT R6

4.3.1 Connection terminals of the power circuit

⚠	**Pay attention to the input voltage, since both 230 V and 480 V are possible!**

Housing Size E	Name	Function	Tightening torque [Nm] / Permissible line cross section [awg]	
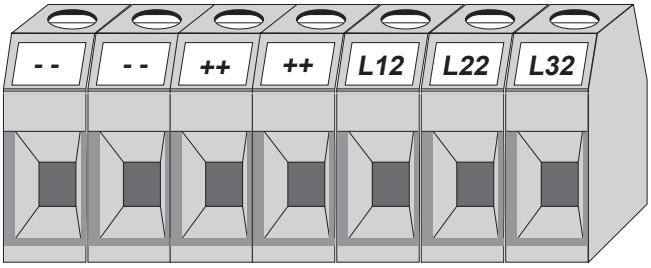	**L12 L22 L32**	3-phase supply input from the commutation choke	Size 15 #16 to #8 Size 19 #14 to #4	Size 15 2 to 4 Size 19 2 to 4
	++ – –	DC voltage input with in rush current limiting		
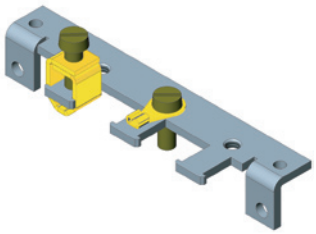	**GND, ⏚**	Connections for shielding and grounding occur via the provided copper ground bar and clamps. It must be mounted to the heatsink with the four screws provided. The strain relief and the shielding must be done by the customer.	–	1.3 for philps. screws 6 for cable clamps

4.3.2 Connection terminals of the commutation choke

15/19.Z1.B05-1000	Name	Function	Tightening torque [Nm] / Permissible line cross section [awg]	
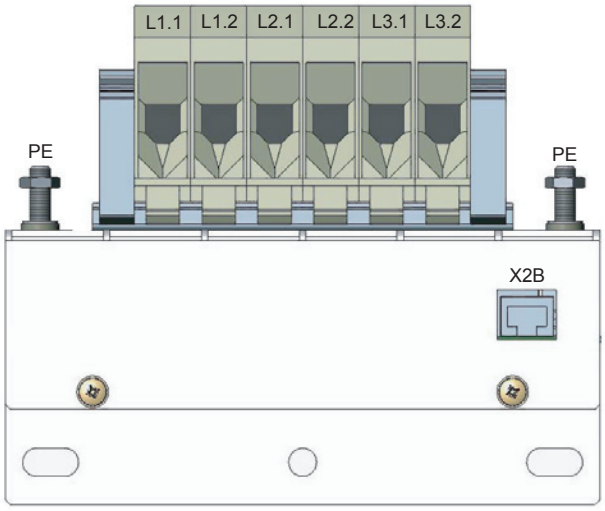	**L1.1 L2.1 L3.1**	3-phase line connections	Size 15 #14 to #6 Size 19 #12 to #2	Size 15 2 to 4 Size 19 6 to 8
	L1.2 L2.2 L3.2	Output to COMBIVERT R6-S		
	X2B	see below	–	–
	PE	Connection for shielding / ground	–	6

X2B RJ45-socket for phase synchronization and temperature sensor	No.	Name	Function
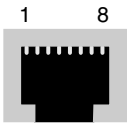	1	t1	Connection for temperature sensor
	2	t2	
	3	U13_syn	Synchronization phase 1 / 3
	4	–	reserved
	5	U21_syn	Synchronization phase 2 / 1
	6	–	reserved
	7	U32_syn	Synchronization phase 3 / 2
	8	–	reserved

4.4 Connection power circuit R6-S with internal fuses

4.4.1 Supply and regen operation with inverter current ≤ current of one COMBIVERT R6-S

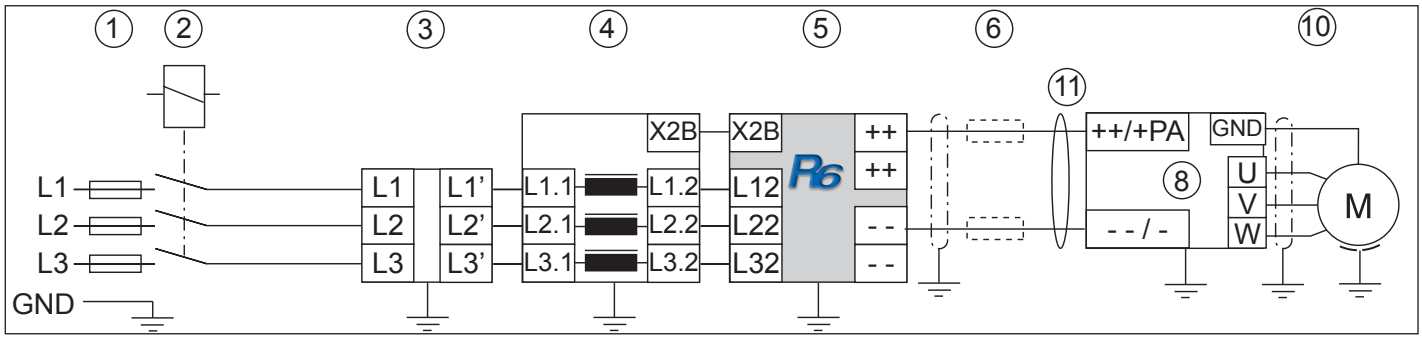

4.4.2 Supply and regen operation with multiple inverter currents ≤ current of one COMBIVERT R6-S

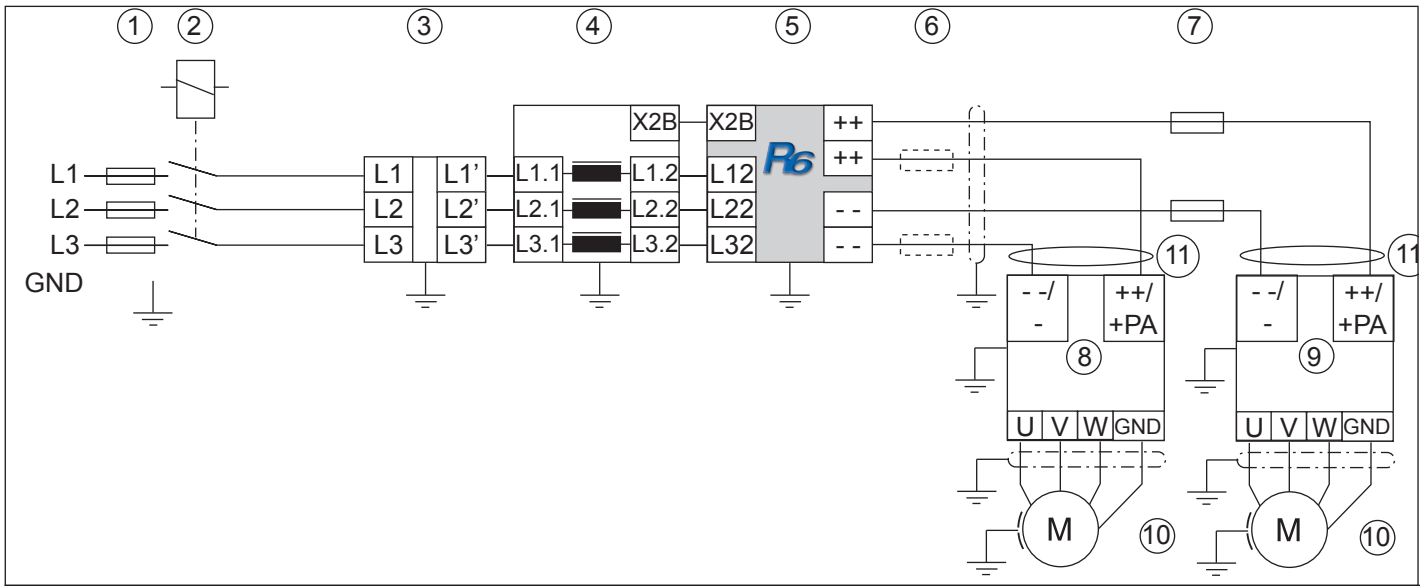

1	Line fuse UL Class RK5	5	COMBIVERT R6-S with internal fuses	9	Frequency Inverter with Irated ≤ Irated(R6)
2	Main Line contactor	6	DC fuses class aR/gR [1)]	10	Motor
3	HF filter	7	DC fuses class aR/gR	11	Ferrite ring
4	Commutation Choke or Harmonic Filter *(with synchronization connection)*	8	Frequency Inverter with Irated ≤ Irated(R6)		

1) When connecting to only one inverter and using an R6 unit with internal fuses, the external fuse is not necessary. In cases with multiple inverters the current to each inverter is less than the rated current of the R6 unit. In this case the fuses are required and the conductor size between the fuse and the inverter can be sized relative to the DC fuse amp rating. However, the conductor between the fuses and the R6 unit may not be smaller than 6 AWG / 10 mm² (10 AWG for the size 15R6) unless the branch circuit protection fuses to the unit are a lower value than that stated in section 3.1. Refer to the table in section 3.1 for more information regarding conductor sizing. Since the R6 unit is acting as a supply to the connected inverters, the sizing of DC bus fuses must be selected such as to provide short circuit protection to the connected inverter.

4.4.3 Supply and regen operation with inverter currents ≥ current of one COMBIVERT R6-S --> (parallel operation of R6 units)

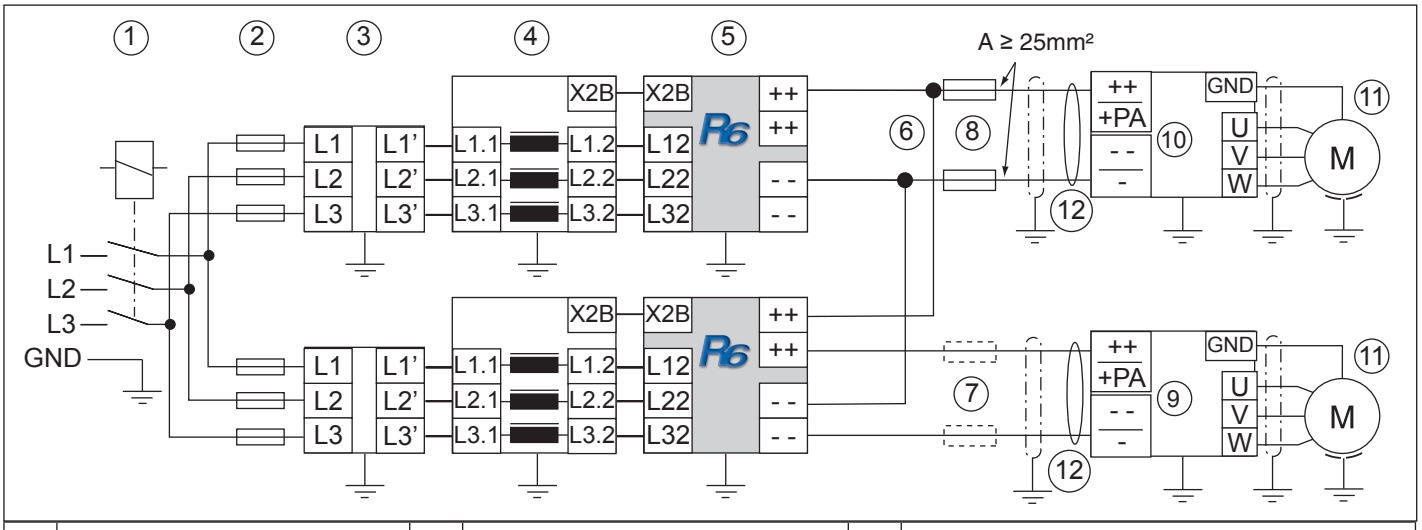

1	Main Line contactor	5	COMBIVERT R6-S with internal fuses	9	Frequency inverter with $I_{rated} \leq I_{rated(R6)}$
2	Line fuse UL class RK5	6	External terminal block [1)]	10	Frequency inverter with $I_{rated} > I_{rated(R6)}$ [1)]
3	HF filter	7	DC fuses class aR/gR [2)]	11	Motor
4	Commutation Choke[3)]	8	DC fuses class aR/gR	12	Ferrite ring

1) If the inverter current is greater than the current of one COMBIVERT R6, the DC bus conductors from the inverter must be connected to an external terminal block to split the current to multiple R6 units. In this case the conductors to each R6 unit must be at least 6 AWG (10 AWG for the size 15R6) or larger based on the DC bus current to each unit.

2) The conductor between the fuses and the R6 unit may not be smaller than 6 AWG (10 mm²) unless the branch circuit protection fuses to the unit are a lower value than that stated in section 3.1. Refer to the table in section 3.1 for more information regarding conductor sizing. Since the R6 unit is acting as a supply to the connected inverters, the sizing of DC bus fuses (#7 above) must be such as to provide protection to the connected inverter.

3) Due to tolerances in the inductance values of the commutation choke, the actual available power of each R6 unit must be reduced by 15% to account for unequal load sharing. Therefore the total power available is reduced. With parallel connection of different sized R6 units, it is necessary to use the same commutation choke in order to maintain the same short circuit voltage (uK) across the chokes.

4.4.4 Regen operation with contactor charge control circuit

Regen inverter currents ≤ current of one R6-S

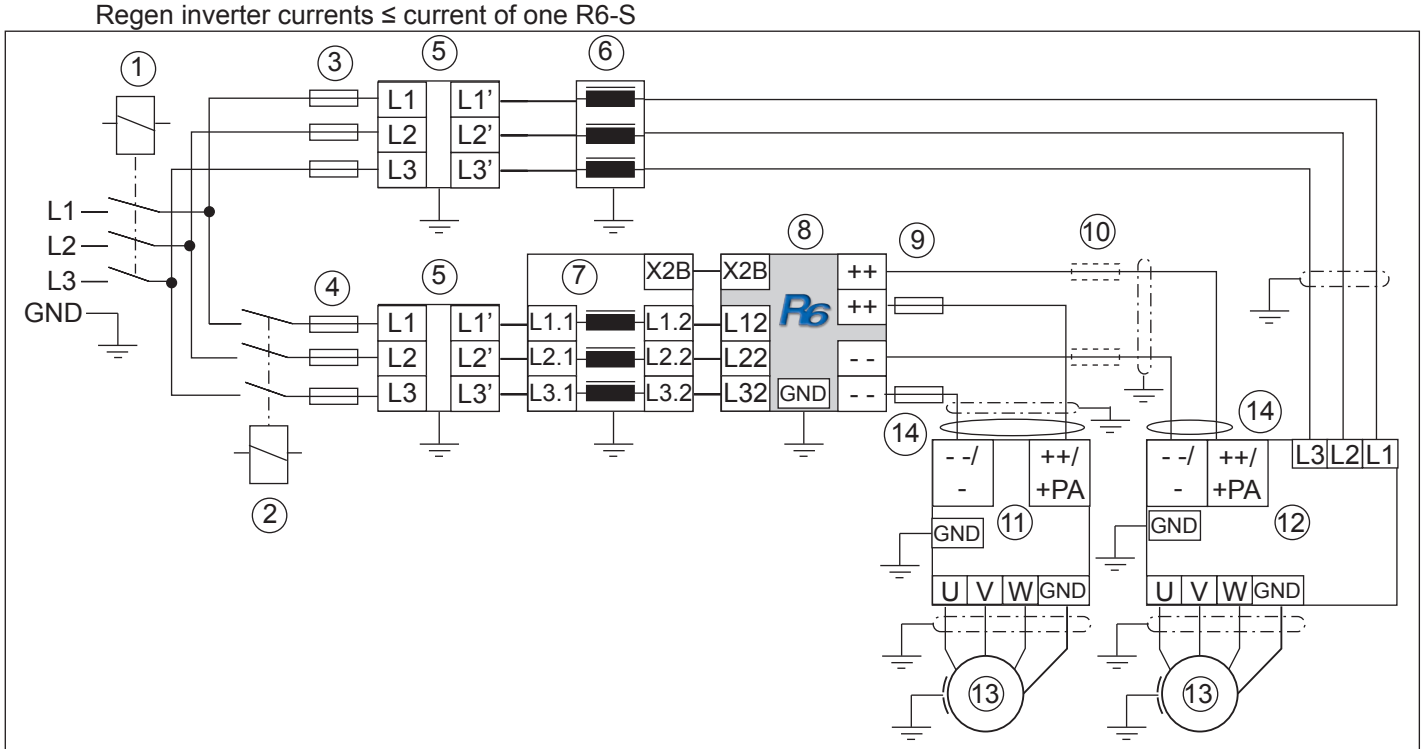

1	Main line contactor	6	Inverter line choke [1) 3)]	11	DC input inverter
2	Regen contactor [2)]	7	Commutation choke [1) 3)]	12	Inverter with DC output
3	Inverter line fuse UL class RK5	8	COMBIVERT R6-S	13	Motor
4	Regen line fuse UL class RK5	9	DC fuses class aR/gR	14	Ferrite ring
5	HF filter	10	DC fuses class aR/gR [4)]		

1) *Current sharing between the R6-S and the frequency inverter must be taken into consideration during motor (supply) operation. The current sharing is dependent on the uk value (voltage drop across the choke) and the nominal current of the line choke (see formula below). If too much current flows through the R6 unit, a second R6 unit should be used in parallel with the first.*

2) *The regenerative contactor may only be closed if the pre-charging of the DC bus circuit of the inverter is completed. A relay output on the R6 unit can provide the control for this contactor. See page 24.*

3) *A line choke with minimum Uk=3% is required for all inverters equal to or greater than size 23. Additionally a line choke is also recommended in general to minimize circle current which can flow between the R6 unit and the frequency inverter during regen operation. This circle current can reduce the available capacity of the R6 unit by 10-25% depending on the value of the choke connected to the inverter and the commutation choke.*

4) *The conductor size may not be smaller than 6 AWG/10mm² (10 AWG for size 15) unless the branch circuit protection fuses to the unit are a lower value than that stated in section 3.1., see the data table in section 3.1 for specific conductor sizes. The conductors must be dimensioned for the rated DC current of the load. Additional fuses in the DC bus circuit may be required to provide protection to the individual inverters connected on the DC bus. The sizing of DC bus fuses must be selected such as to provide short circuit protection to the connected inverter.*

Formula to determine the input current sharing

$$X_{choke} = \omega \cdot L_{choke} \approx \frac{uk_{choke}}{In_{choke}} \qquad I_{R6} = \frac{X_{choke\ FI}}{(X_{choke\ FI} + X_{choke\ R6})} \cdot I_{total} = \frac{L_{choke\ FI}}{(X_{choke\ FI} + X_{choke\ R6})} \cdot I_{total}$$

uK = voltage drop of choke
In = rated current of choke
FI= frequency inverter
I_{total}= total input current

e.g. 4% * 480V = 19.2V

4.4.5 Regen operation with de-coupling diodes

Regenerative inverter currents ≤ current of one R6-S

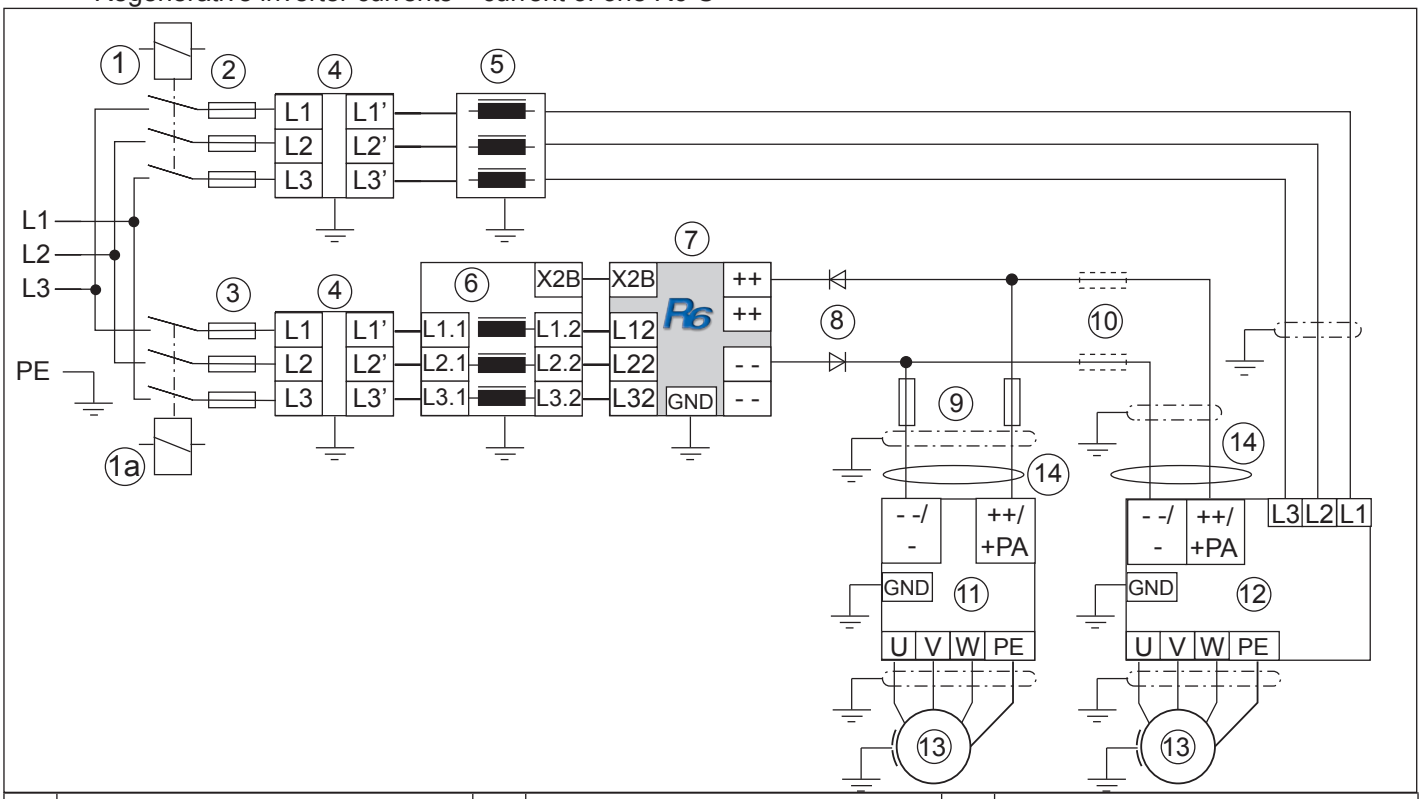

1	Main line contactor	5	Inverter line choke [1) 3)]	10	DC fuses class aR/gR [4)]
1a	Regen Contactor [2)]	6	Commutation choke [1) 3)]	11	DC input inverter
2	Inverter Line fuse UL class RK5	7	COMBIVERT R6-S	12	Inverter with DC output
3	Regen Line fuse UL class RK5	8	De-coupling diodes	13	Motor
4	HF filter	9	DC fuses class aR/gR	14	Ferrite ring

1) Current sharing between the R6-S and the frequency inverter must be taken into consideration during motor (supply) operation. The current sharing is dependent on the uk value (voltage drop across the choke) and the nominal current of the line choke (see formula below). If too much current flows through the R6 unit, a second R6 unit should be used in parallel with the first.

2) The regenerative contactor may only be closed if the pre-charging of the DC bus circuit of the inverter is completed. A relay output on the R6 unit can provide the control for this contactor. See page 24.

⚠

3) A line choke with minimum Uk=3% is required for all inverters equal to or greater than size 23. Additionally a line choke is also recommended in general to minimize circle current which can flow between the R6 unit and the frequency inverter during regen operation. This circle current can reduce the available capacity of the R6 unit by 10-25% depending on the value of the choke connected to the inverter and the commutation choke.

4) The conductor size may not be smaller than 6 AWG/10mm² (10 AWG for size 15) unless the branch circuit protection fuses to the unit are a lower value than that stated in section 3.1., see the data table in section 3.1 for specific conductor sizes. The conductors must be dimensioned for the rated DC current of the load. Additional fuses in the DC bus circuit may be required to provide protection to the individual inverters connected on the DC bus. The sizing of DC bus fuses must be selected such as to provide short circuit protection to the connected inverter.

4.4.6 Regenerative operation with parallel operation of COMBIVERT R6-S and regen contactor

Regenerative inverter currents > current of one R6-S

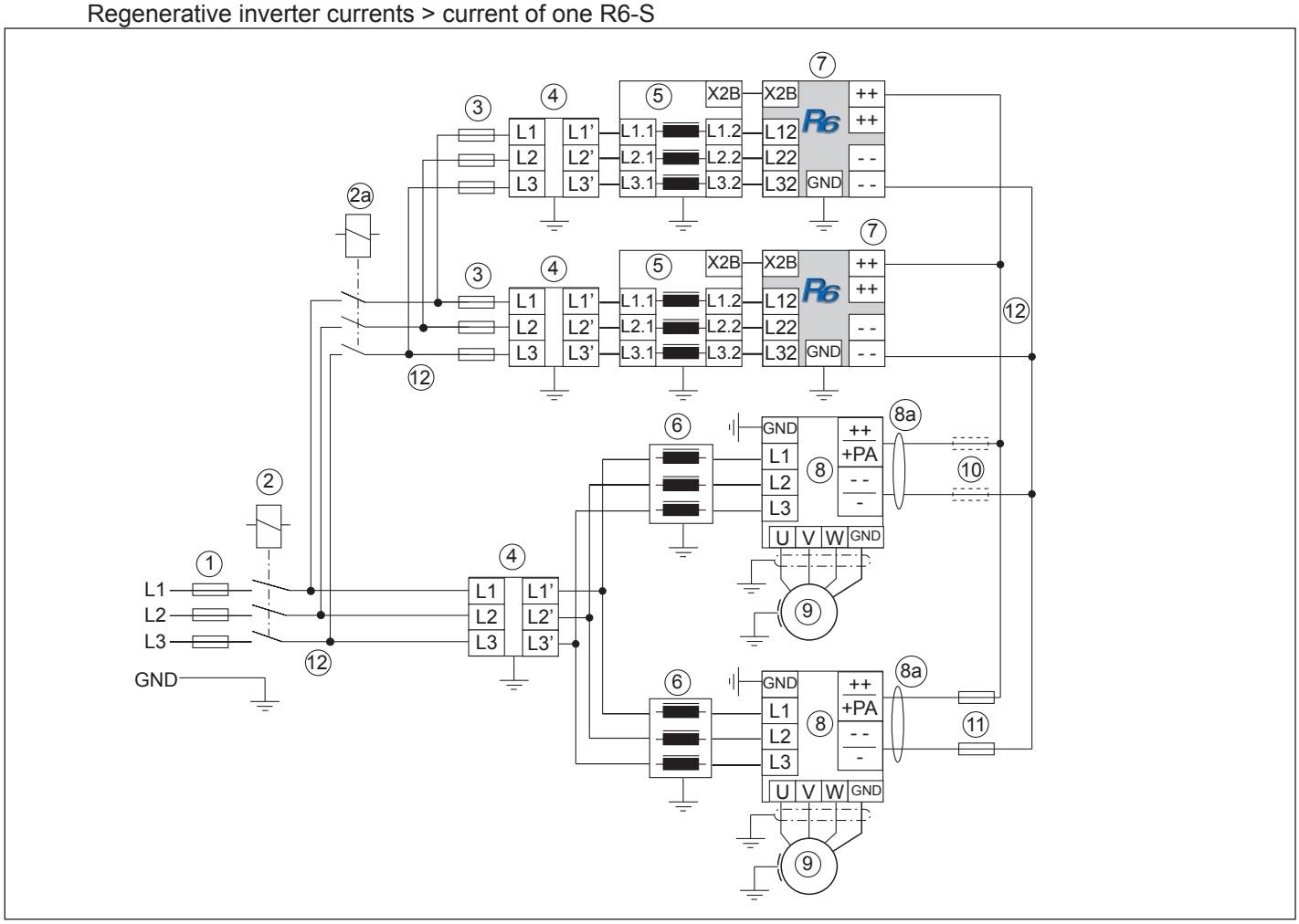

1	Main line fuse UL class RK5	5	Commutation choke [1) 3)]	9	Motor
2	Main line contactor	6	Inverter line choke [1) 3)]	10	DC fuses class aR/gR [4)]
2a	Regen contactor [2)]	7	COMBIVERT R6-S [6)]	11	DC fuses class aR/gR
3	regen line fuse UL class RK5	8	Inverter with DC input	12	External terminal block[5)]
4	HF filter	8a	Ferrite ring		

1) *Current sharing between the R6-S and the frequency inverter must be taken into consideration during motor (supply) operation. The current sharing is dependent on the uk value (voltage drop across the choke) and the nominal current of the line choke (see formula below). If too much current flows through the R6 unit, a second R6 unit should be used in parallel with the first.*

2) *The regenerative contactor may only be closed if the pre-charging of the DC bus circuit of the inverter is completed. A relay output on the R6 unit can provide the control for this contactor. See page 24.*

⚠

3) *A line choke with minimum Uk=3% is required for all inverters equal to or greater than size 23. Additionally a line choke is also recommended in general to minimize circle current which can flow between the R6 unit and the frequency inverter during regen operation. This circle current can reduce the available capacity of the R6 unit by 10-25% depending on the value of the choke connected to the inverter and the commutation choke.*

4) *The conductor size may not be smaller than 6 AWG/10 mm² (10 AWG for size 15) unless the branch circuit protection fuses to the unit are a lower value than that stated in section 3.1., see the data table in section 3.1 for specific conductor sizes. The conductors must be dimensioned for the rated DC current of the load. Additional fuses in the DC bus circuit may be required to provide protection to the individual inverters connected on the DC bus. The sizing of DC bus fuses must be selected such as to provide short circuit protection to the connected inverter.*

5) *If the inverter current is greater than the current of one COMBIVERT R6, the DC bus conductors from the inverter must be connected to an external terminal block to split the current to multiple R6 units. In this case the conductors to each R6 unit must be at least 6 AWG (10 AWG for the size 15R6) or larger based on the DC bus current to each unit.*

6) *Due to tolerances in the inductance values of the commutation choke, the actual available power of each R6 unit must be reduced by 15% to account for unequal load sharing. Therefore the total power available is reduced. With parallel connection of different sized R6 units, it is necessary to use the same commutation choke in order to maintain the same short circuit voltage (uK) across the chokes.*

4.4.7 Regenerative operation with parallel operation of COMBIVERT R6-S w/de-coupling diodes

Regenerative inverter currents > current of one R6-S

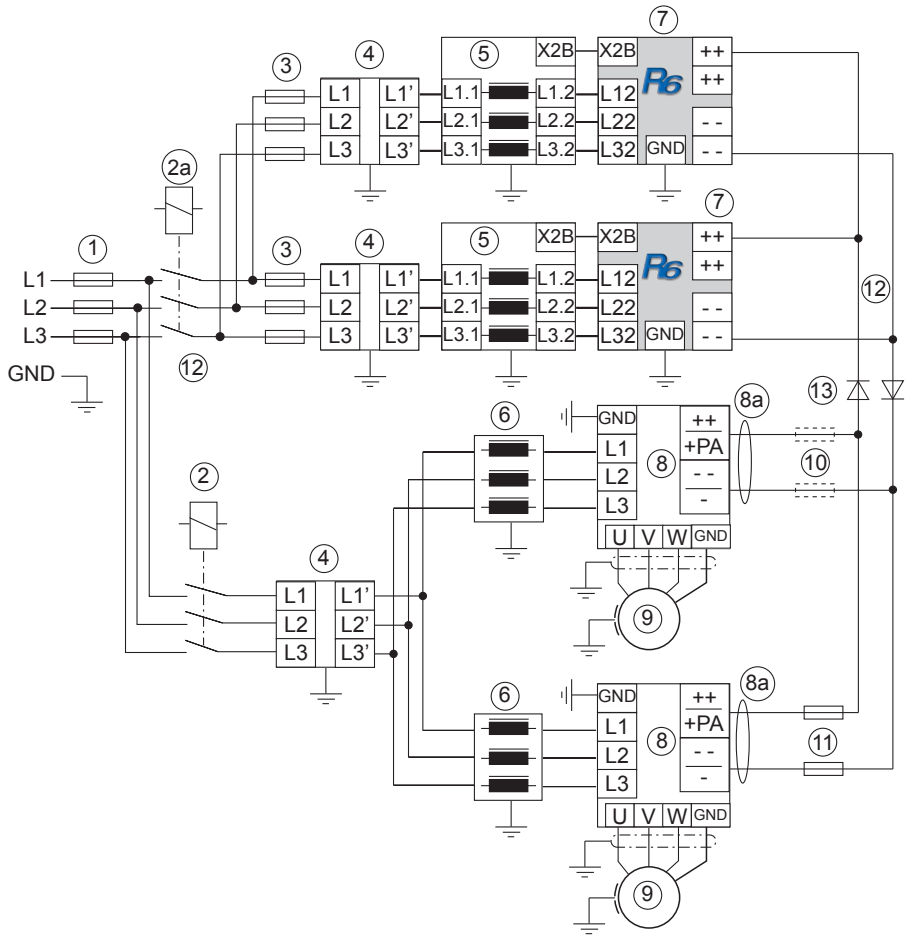

1	Main line fuse UL class RK5	5	Commutation choke 1) 3)	9	Motor
2	Inverter contactor	6	Inverter line choke 1) 3)	10	DC fuses class aR/gR 4)
2a	Inverter contactor 2)	7	COMBIVERT R6-S 6)	11	DC fuses class aR/gR
3	Mains fuse type gR	8	Inverter with DC input	12	External terminal block 5)
4	HF filter	8a	Ferrite ring	13	Decoupling diodes

1) *Current sharing between the R6-S and the frequency inverter must be taken into consideration during motor (supply) operation. The current sharing is dependent on the uk value (voltage drop across the choke) and the nominal current of the line choke (see formula below). If too much current flows through the R6 unit, a second R6 unit should be used in parallel with the first.*

2) *The regenerative contactor may only be closed if the pre-charging of the DC bus circuit of the inverter is completed. A relay output on the R6 unit can provide the control for this contactor. See page 24.*

3) *A line choke with minimum Uk=3% is required for all inverters equal to or greater than size 23. Additionally a line choke is also recommended in general to minimize circle current which can flow between the R6 unit and the frequency inverter during regen operation. This circle current can reduce the available capacity of the R6 unit by 10-25% depending on the value of the choke connected to the inverter and the commutation choke.*

4) *The conductor size may not be smaller than 6 AWG/10mm² (10 AWG for size 15) unless the branch circuit protection fuses to the unit are a lower value than that stated in section 3.1., see the data table in section 3.1 for specific conductor sizes. The conductors must be dimensioned for the rated DC current of the load. Additional fuses in the DC bus circuit may be required to provide protection to the individual inverters connected on the DC bus. The sizing of DC bus fuses must be selected such as to provide short circuit protection to the connected inverter.*

5) *If the inverter current is greater than the current of one COMBIVERT R6, the DC bus conductors from the inverter must be connected to an external terminal block to split the current to multiple R6 units. In this case the conductors to each R6 unit must be at least 6 AWG (10 AWG for the size 15R6) or larger based on the DC bus current to each unit.*

6) *Due to tolerances in the inductance values of the commutation choke, the actual available power of each R6 unit must be reduced by 15% to account for unequal load sharing. Therefore the total power available is reduced. With parallel connection of different sized R6 units, it is necessary to use the same commutation choke in order to maintain the same short circuit voltage (uK) across the chokes.*

4.5 Control connections

4.5.1 Assignment of the control terminal strip X2A

X2A

Tightening torque 0,5 Nm

PIN	Function	Name	Description	Specifications
10	24…30 V input	Vin	External supply of the control board	
11	Common	COM	Reference potential	
12	Digital input 1	ST	Enable	R_{in}: 4.4 kΩ
13	Digital input 2	I1	Reset	
14	Digital input 3	I2	Programmable	
15	Digital input 4	I3	Programmable	
16	Digital in-/output	I/O	Active signal (connection of all R6 at parallel operation in master-slave procedure)	
17	24 V-output	Vout	Voltage supply for in- and outputs	24 V +/-1 / max. 100 mA
18	Common	COM	Reference potential	
19	Digital output 1	O1	Transistor output	I_{max}: 25 mA
20	Digital output 2	O2	Transistor output	I_{max}: 25 mA
21	Analog output	ANOUT	-	0…±10 V / max. 5 mA
22	24 V-output	Vout	see terminal 17	
23	Mass	COM	Reference potential	
24	Relay 1 / NO contact	RLA	Relay output (RDY - Ready no Fault)	30 V DC 0.01…2 A 125VAC 0.01...2 A
25	Relay 1 / NC contact	RLB		
26	Relay 1 / switching contact	RLC		
27	Relay 2 / NO contact	FLA	Relay output (CCC - Charge Contactor Control)	
28	Relay 2 / NC contact	FLB		
29	Relay 2 / switching contact	FLC		

4.5.2 Assignment of socket X2B

RJ45 socket for phase synchronization and temperature sensor	No.	Name	Function
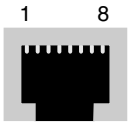	1	t1	Connection for temperature sensor
	2	t2	
	3	U13_syn	Synchronization phase 1 / 3
	4	–	reserved
	5	U21_syn	Synchronization phase 2 / 1
	6	–	reserved
	7	U32_syn	Synchronization phase 3 / 2
	8	–	reserved

The connection is made with a shielded industrial ethernet patch cable 1:1 with the socket X2B on the commutation choke.

4.5.3 Wiring example

In order to prevent a malfunctions caused by interference voltages on the control inputs, the following points should be observed:

EMC

- Use shielded / twists control cables
- Connect the shield on the end connected to the inverter using the grounding bar
- Install control and power cable separately (about 6-8 inches (15...20 cm) apart) control conductors should cross high voltage power conductors at right angles

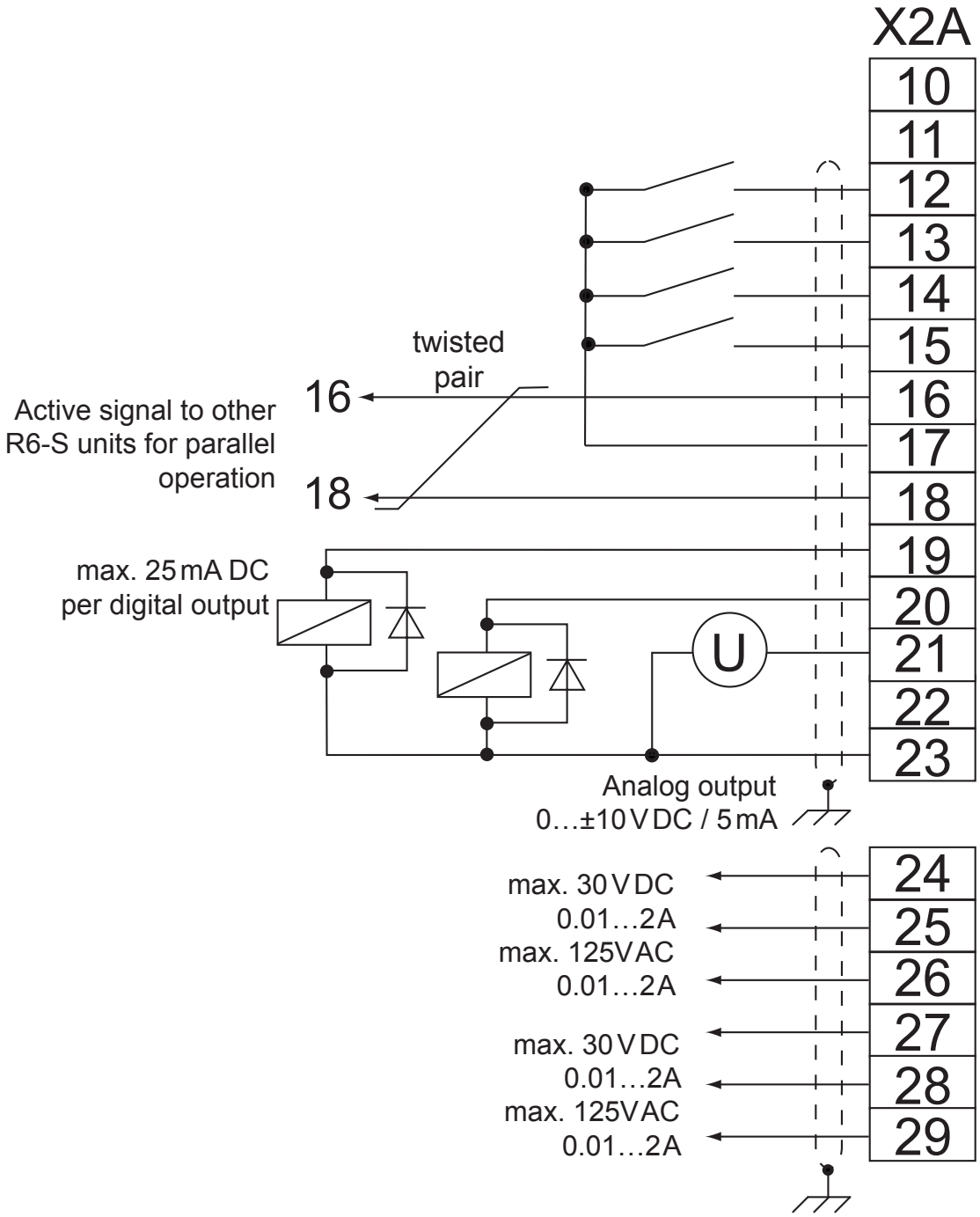

4.6 Operator

As an accessory a keypad operator can be installed. To prevent malfunctions, the COMBIVERT must be brought into nOP status before connecting or disconnecting the operator (de-activate the enable input). When starting the COMBIVERT R6, it is started with the last stored values or factory settings regardless of whether the operator is installed or not.

		Digital operator (part number 00.F5.060-1000) / Serial Interface operator (part number 00.F5.060-2000)
x	x	5-digit LED Display
x	x	Operating-/Error display Normal "LED on" Error "LED blinks"
-	x	Interface control Transmit "LED on"
x	x	Double function keyboard
-	x	X6B HSP5 programming and diagnostic interface
-	x	X6C RS232/RS485

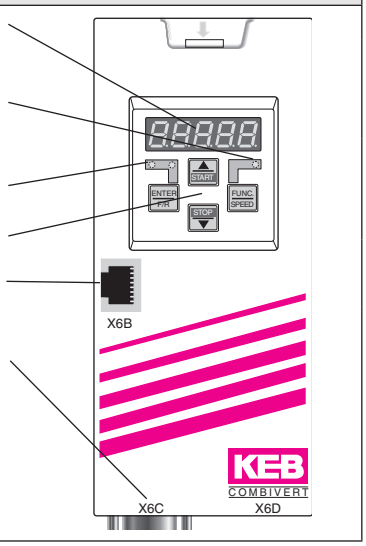

Do not connect a PC to the operator interface connector on the COMBIVERT R6 unit! Damage to the PC may result. Direct connection, PC to the COMBIVERT R6 is only possible with a special cable (part number 00.F5.0C0-0001).

X6C

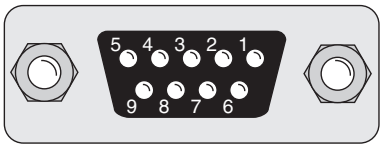

PIN	RS485	Signal	Meaning
1	-	-	reserved
2	-	TxD	Transmission signal RS232
3	-	RxD	Receive signal RS232
4	A‘	RxD-A	Receive signal A RS485
5	B‘	RxD-B	Receive signal B RS485
6	-	VP	Voltage supply +5 V (Imax=10 mA)
7	C/C‘	DGND	Data reference potential
8	A	TxD-A	Transmission signal A RS485
9	B	TxD-B	Transmission signal B RS485

RS 232 cable
Part number
00.58.025-001D
Length 3 m

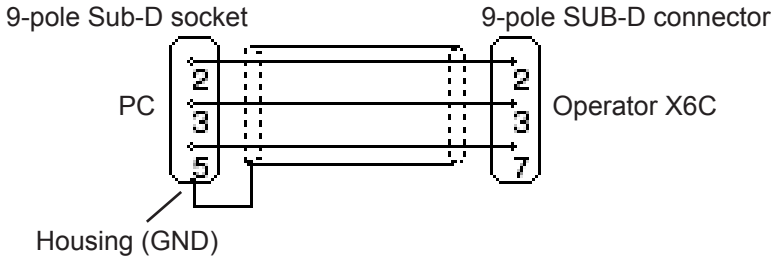

5. Operation of the Unit

5.1 Keyboard

When switching on the KEB COMBIVERT R6-S the value of parameter CP.1 appears.

The function key (FUNC) changes between the parameter value and parameter number.

With UP (▲) and DOWN (▼) the value of the parameter number is increased/decreased with changeable parameters.

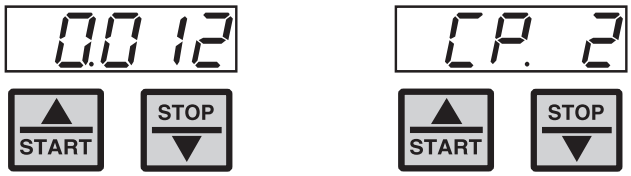

Generally, changes to parameter values are immediately accepted and stored non-volatile. However, with some parameters, due to their functionality, the adjusted value is not accepted immediately. With this parameters (see parameter overview) the adjusted value is accepted and stored non-volatile by pressing ENTER.

If an error occurs during operation, then the actual display is overwritten by the error message. The error message in the display is reset by ENTER.

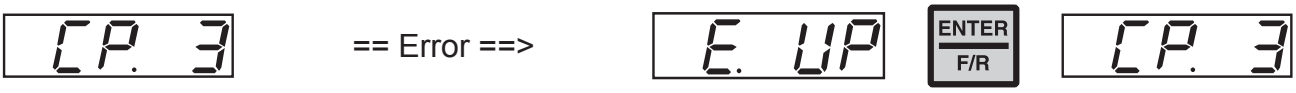

With ENTER only the error message in the display is reset. The status display (CP.3) still displays the error. In order to reset the error itself, the cause must be corrected and a power-on reset must be made. Note: The R6 unit will attempt to reset errors on its own based on the auto reset parameter.

5.2 Operation with PC and programming software COMBIVIS

Instructions for the installation and operation of the programming software COMBIVIS are provided with the software

5.3 Turn-on procedure

The COMBIVERT R6-S is initialized after connection of the main line supply. The power circuit identification is checked first. If an invalid power circuit is recognized, error "E.PuCi" (power unit check) is triggered and displayed in the operator. This error cannot be reset, the power circuit must be checked.

If a valid power circuit is recognized, COMBIVERT R6-S changes into status "SYn". The following procedures take place one after another during this synchronisation phase:

- Verification of correct synchronisation to the line, (error "E.nEt" is triggered, if the synchronization signals are missing)
- Verification of the phasing of the synchronization signals to the main line phases. Error "E.SYn" is triggered if a phase signal is missing or in case the phasing is not correct.
- The actual line frequency is determined.

The unit is now ready for operation. If the enable (terminal X2A.12) is activated, the COMBIVERT R6-S is put into operation. Depending on the actual value of the DC bus voltage, the COMBIVERT R6-S is in status "rEgEn" or "Stdby".

Status "Stdby"

COMBIVERT R6-S detects the idle voltage level in the DC bus circuit of the connected frequency inverter (motor operation) and keeps the modulation signals of the regen unit deactivated.

Status "rEgEn"

If the DC bus voltage rises above 103% of the idle voltage (CP.9), the modulation signals are activated and the unit changes into regen operation. Alternately, if another R6 unit connected in parallel switches into "rEgEn" mode, the slave unit will immediately switch into regen mode simultaneously.

5.2 Parameter summary

The CP parameters serve as the base level parameters to adjust and monitor operation of the COMBIVERT R6 unit.

Display	Parameter	Setting range	Resolution	Factory setting
CP.0	Password input	0…9999	1	–
CP.1	Status display	–	–	–
CP.2	Main Line Frequency	–	0.1 Hz	–
CP.3	AC-Phase current L1	–	0.1 A	–
CP.4	AC-Phase current L2	–	0.1 A	–
CP.5	AC-Phase current L3	–	0.1 A	–
CP.6	Actual Load	–	1 %	–
CP.7	Actual Load / peak value	–	1 %	–
CP.8	DC output current	–	0.1 A	–
CP.9	Actual DC voltage	–	1 V	–
CP.10	DC voltage / peak value	–	1 V	–
CP.11	Heat sink temperature	–	1 °C	–
CP.12	Over load counter	–	1 %	–
CP.13	Active power	–	0.1 kW	–
CP.14	Total regen kWhr counter	–	0.1 kWh	–
CP.15	Total motor kWhr counter	–	0.1 kWh	–
CP.16	Total net kWhr counter	–	0.1 kWh	–
CP.17	Apparent power / Line input	–	0.1 kVA	–
CP.18	Analog output 1 / amplification factor	-20.00…20.00	0.01	1.00
CP.19	DC bus switching level	+/-30000.00	0.01	600.00
CP.20	Auto error reset counter	0...10	1	3
CP.21	Last Error	-	-	-
CP.22	Last Error 1	-	-	-
CP.23	Last Error 2	-	-	-
CP.24	Last Error 3	-	-	-
CP.25	Last Error 4	-	-	-
CP.26	Last Error 5	-	-	-
CP.27	Last Error 6	-	-	-
CP.28	Last Error 7	-	-	-
CP.29	Software version	-	-	1.2
CP.30	Software date code	DDMM.Y	-	1203.7
CP.31	Power part ID code	-	-	250

5.3 Password input

CP.00 Password input

From the factory the COMBIVERT R6-S is supplied without password protection, i.e. all changeable parameters can be adjusted. After programming, the unit can be protected against unauthorized access (Passwords: see last but one page). With the "read only" password the adjusted values are locked against further change.

Locking the **CP-Parameters READ ONLY**	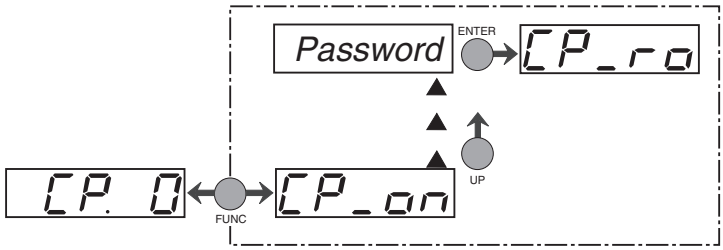
Enabling the **CP-Parameters READ / WRITE**	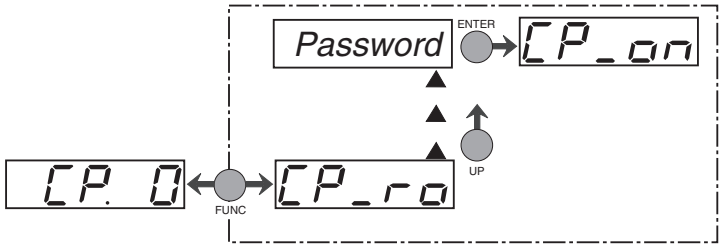

5.4 Parameter description

The following parameters the allow the user to monitor the functionality during operation.

CP.01 Status display

The status display shows the actual operating mode of the COMBIVERT R6. Possible displays and their meanings are:

Status Messages	
rEgEn	Regen active (regeneration operation)
bbL	base-block time, Unit is blocked from operation for a short period - follows all errors.
noP	"no Operation" the enable input is not activated, output modulation switched off
nEtoF	Line power failure; Regen operation mode is possible
Stdby	The unit is enabled but in stand-by operation (motoric operation)
SYn	Phase synchronization mode, checks connection and phase angle of the line votlage
Error Messages	
E.dOH	Error: Over temperature commutation choke; temperature sensing on the commutation choke is indicating the choke is too hot and the overheat delay timer has run out.
E. EF	Error: External Fault, error trigger by an external device through one of the digital inputs
E.nEt	Error: Line, one or more phases are missing
E.nOH	Error: NO Over Heat, over-temperature condition not present (E.OH error can be reset)
E.nOL	Error: NO Over load, cooling period after E.OL is over, error can now be reset
E. OC	Error: Over current, output current too high or ground fault
E. OH	Error: Over temperature, overheating of the heat sink (see "technical data")
E.OHI	Error: R6 Unit interior temperature too high, temperature in the interior > 95 °C
E. OL	Error: Over Load, the actual load was greater than 105% and the overload timer timed out.
E. OP	Error: Over Voltage, DC bus voltage is too high, > 900VDC
E.PuC	Power unit identification is invalid
E.SYn	Error: Synchronization, connection of line phases at the commutation choke is not correct
E. UP	Error: Under voltage, DC bus voltage too low

CP.02 Actual line frequency

After switching on the actual line frequency is determined during the initialization phase. Slowly, changes of the line frequency during operation are recognized and displayed in CP.02. CP.02 displays the actual regenerative frequency, if the COMBIVERT R6-S is in "netof" state, i.e. the main line is off. The rotating field of the mains frequency is displayed as follows: (+) right, (-) left

CP.03 AC-Phase current L1

CP.03 displays the rms value of the current of phase L1 in amperes.

CP.04 AC-Phase current L2

CP.04 displays the rms value of the current of phase L2 in amperes.

CP.05 AC-Phase current L3

CP.05 displays the rms value of the current of phase L3 in amperes.

CP.06 Actual Load

Parameter CP.06 displays the actual load of the COMBIVERT R6-S in percent. 100 % represents an output current, which corresponds to the rated current of the COMBIVERT R6-S. The absolute value of the load is displayed. The sign indicates the energy direction: (+) = supply, (-) = feedback

CP.07 Actual Load / peak value

Parameter CP.07 stores the peak load value within an operating cycle. The highest value of CP.06 is stored in CP.07. The peak value can be cleared by pressing the UP and DOWN key or over bus by writing any value you like to the address of CP.07. Switching off COMBIVERT R6-S also clears the stored value.

CP.08 DC output current

Display of the actual DC current in amperes.

CP.09 Actual DC - voltage

Display of actual DC-Bus voltage in volts. The value is measured at the terminals "++" and "- -" of the COMBIVERT R6-S.

CP.10 Actual DC - voltage / peak value

Parameter CP.10 allows the user to recognize short-term peak values within an operating cycle. The highest value of CP.09 is stored in CP.10. The peak value can be cleared by pressing the UP and DOWN key or over bus by writing any value you like to the address of CP.10. Switching off COMBIVERT R6-S also clears the stored value.

CP.11 Heat sink temperature

Display of the actual heat sink temperature in °C. First a pre-warning can be given via digital output if the heat sink temperature is too high, so a controlled deceleration of the unit is possible. The modulation is shut off and the unit de-activated when reaching the max. heat sink temperature, if there is no reaction to the pre-warning.

CP.12 Over load counter

The average load of the COMBIVERT R6-S can be evaluated with this parameter in order to avoid an E.OL error (time based overload). When the actual load goes above 105%, the counter begins to increment. The Error E.OL is triggered, if the overload counter reaches 100 %.

CP.13 Active power

CP.13 displays the actual active power of the COMBIVERT R6-S. Motor power is displayed with positive values, generated power is displayed with negative values.

CP.14 Total regen

Counter of the total regenerated electrical energy returned to the line in kWh.

CP.15 Total motor

Counter for the total supplied electrical energy from the line in kWh.

CP.16 Total net

Display of the difference between supplied and regenerated energy. The sign of the value displayed indicates a net energy supply from the line (+) or return to the line (-).

CP.17 Apparent power / Line input

Display of the actual apparent power at the mains input (kVA).

CP.18 Analog output 1 / amplification factor

This serves as a gain for the analog output 1. This output provides a signal in a range of 0...10 VDC = 0...150 % I_{DC} which corresponds to the DC-bus current. The gain can be adjusted with CP.18 in a range of 0...±20,00. With this parameter, the analog output signal can be adapted to individual requirements.

CP.19 DC Bus switching level

This sets a voltage threashold for the switching of the solid state output O1 and the Relay output R2. When the DC bus voltage rises above this value, the output is activated. Additionally for output relay R2, the internal charging contactor of the R6 unit must be closed in order for R2 to activate. In general for 480V applications this parameter should be set to 600V and for 230V applciations, 280V.

CP.20 Auto reset counter

This parameter can be used to activate an auto reset counter to reset errors. Attention, an auto restart could allow the system to resume operation at any time! Protective measures must be implemented for service personel and machine operation to prevent injury or damage.

A value of 0 means no automatic reset. Errors can only be reset via the terminal strip or power cycle.
Values of 1…10 determine the maximum number of times per hour the unit will auto reset an error. If the number of errors exceeds this value, the unit will stop with the last error. Reset will then only be possible via the terminal strip.

CP.21...28 Last error(s)

The parameters CP.21...28 display the last eight triggered errors with the exception of "Under voltage" E>UP which is not stored. The oldest error is found in CP.28. When a new error occurs, the error message is stored in CP.21. All previous error messages are shifted by one to the next parameter. The oldest error in CP.28 is lost. The meaning of the error codes can be found in the description for CP.1.

CP.29 Software version

This parameter displays the software version. Example: Version 1.2 = 1.20

CP.30 Software date code

This parameter displays the software compile date i nthe format DDMM.Y. Example: 1203.7

CP.31 Power part ID code

This parameter displays the identification code of the power part. When the unit is first turned on, the COMBIVERT R6 determines which line voltage it is conencted to (230V/480V). Depending on that, various interal parameters are set. If the unit is then connected the other line voltage, the internal parameter settings are not correct. The unit then triggers the error Power Unit Change (E.Puch). To reset the fault, it is necessary to confirm the change by displaying the new value of this parameter and pressing enter. The unit will then configure itself for the new voltage level. The unit is tested on a 480V line at the factory.

A. Appendix

A.1 Dimensioning power supply and regenerative units

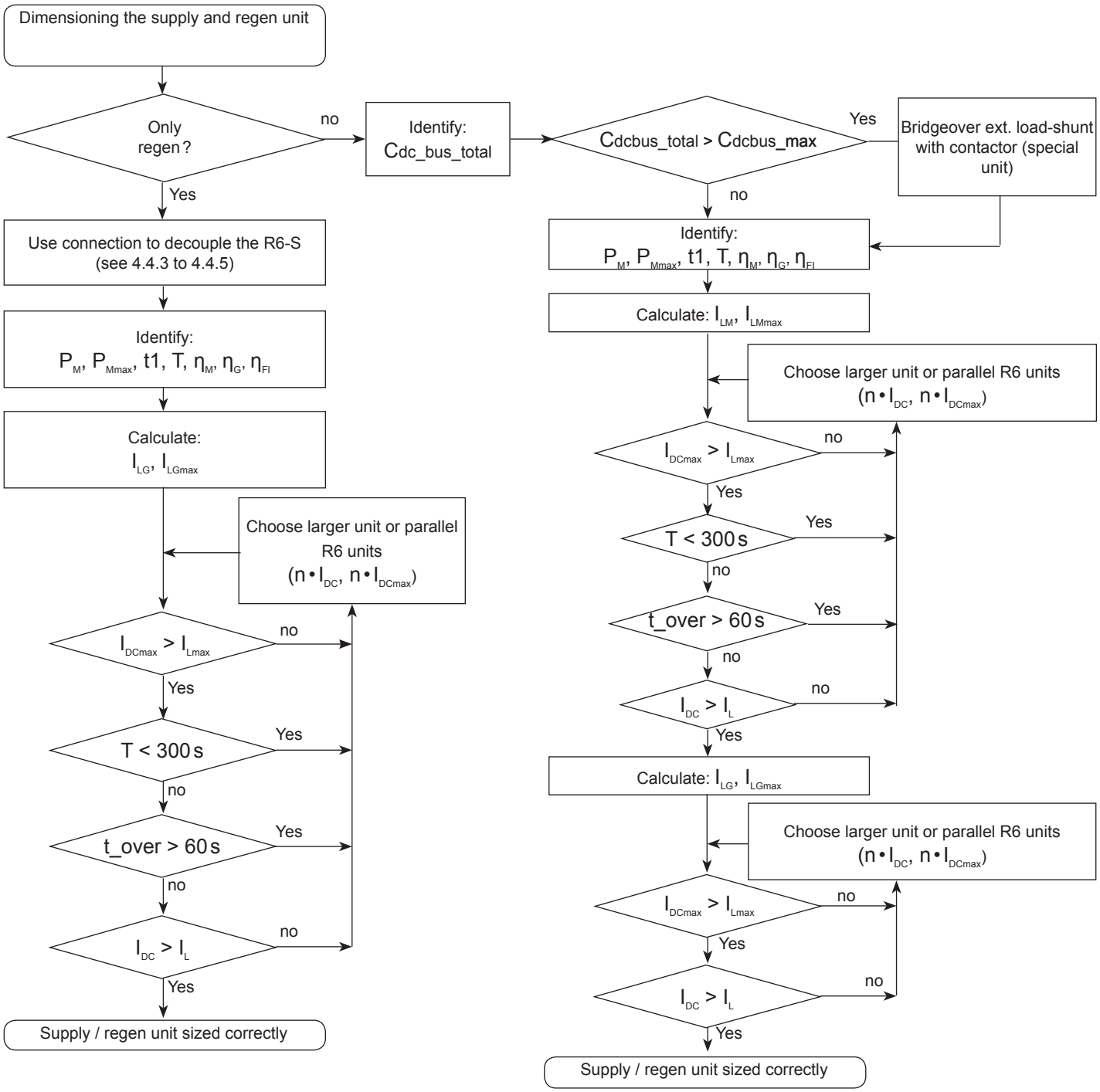

P_M	Mechanical power	η_M	Motor efficiency	I_{DC}	DC output current R6-S
P_{Mmax}	Max. mechanical power	η_G	Gearbox efficiency	I_{DCmax}	Max. DC output current R6-S
t1	Overload time	η_{FI}	Inverter efficiency	I_{LG}	DC load regenerative current
t	Cycle duration time	I_{LM}	DC load motoring current	I_{LGmax}	Max. DC load regenerative current
n	Number of R6 units	I_{LMmax}	Max. DC load motoring current	Cdcbus_ total	DC bus capacitance of all connected frequency inverters
				Cdcbus_ max	Max. DCbus charging capacity of R6-S

A.2 DC Bus capacitance of KEB frequency inverters

200 V units		400 V units	
Size	Capacity	Size	Capacity
05	780 µF	05	180 µF
07	880 µF (940 µF*)	07	180 µF (300 µF*)
09	1080 µF	09	300 µF
10	1080 µF	10	345 µF
12	2220 µF	12	470 µF
13	3280 µF	13	580 µF
14	4100 µF	14	650 µF
15	4100 µF	15	940 µF
16	5040 µF	16	1290 µF
17	9900 µF	17	1640 µF
18	13200 µF	18	1875 µF
19	15600 µF	19	2700 µF
20	16500 µF	20	3900 µF
21	19800 µF	21	4950 µF
		22	4950 µF
		23	6350 µF
		24	8400 µF
		25	9900 µF
		26	11700 µF
		27	14100 µF

*) special version

*) special version

PASSWORDS

From the factory the COMBIVERT R6-S is supplied without password protection, i.e. all changeable parameters can be adjusted. After programming, the unit can be protected against unauthorized access (Passwords: see last but one page). With the "read only" password the adjusted values are locked against further change.

Locking the **CP-Parameters** **READ ONLY** **PASSWORD = 100**	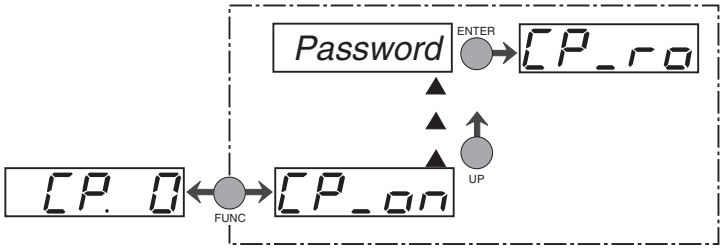
Enabling the **CP-Parameters** **READ / WRITE** **PASSWORD = 200**	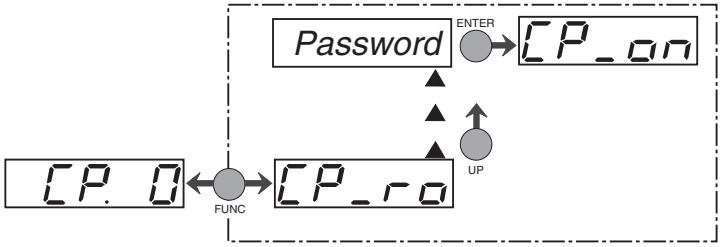

KEB America, Inc.
5100 Valley Industrial Blvd. South
USA-Shakopee, MN 55379
ph: +1 952 224-1400 • fax: +1 952 224-1499
web: www.kebamerica.com • mail: info@kebamerica.com

KEB Antriebstechnik GmbH & Co. KG
Wildbacher Str. 5 • **D**–08289 Schneeberg
ph: +49 3772 67-0 • fax: +49 3772 67-281
mail: info@keb-combidrive.de

KEB Antriebstechnik Austria GmbH
Ritzstraße 8 • **A**-4614 Marchtrenk
ph: +43 7243 53586-0 • fax: +43 7243 53586-21
web: www.keb.at • mail: info@keb.at

KEB Antriebstechnik
Herenveld 2 • **B**-9500 Geraadsbergen
ph: +32 5443 7860 • fax: +32 5443 7898
mail: vb.belgien@keb.de

KEB Power Transmission Technology (Shanghai) Co. Ltd.
Industry Development District
No. 28 Dongbao Road Song Jiang
CHN-201613 Shanghai, PR. China
ph: +86 21 51 099 995 • fax: +86 21 67 742 701
web: www.keb.cn • mail: info@keb.cn

KEB Antriebstechnik Austria GmbH
Organizační složka
K. Weise 1675/5 • **CZ**-370 04 České Budějovice
ph: +420 387 699 111 • fax: +420 387 699 119
web: www.keb.cz • mail: info.keb@seznam.cz

KEB España
C/ Mitjer, Nave 8 - Pol. Ind. LA MASIA
E-08798 Sant Cugat Sesgarrigues (Barcelona)
ph: +34 93 897 0268 • fax: +34 93 899 2035
mail: vb.espana@keb.de

Société Française KEB
Z.I. de la Croix St. Nicolas • 14, rue Gustave Eiffel
F-94510 LA QUEUE EN BRIE
ph: +33 1 49620101 • fax: +33 1 45767495
web: www.keb.fr • mail: info@keb.fr

KEB (UK) Ltd.
6 Chieftain Buisiness Park, Morris Close
Park Farm, Wellingborough **GB**-Northants, NN8 6 XF
ph: +44 1933 402220 • fax: +44 1933 400724
web: www.keb-uk.co.uk • mail: info@keb-uk.co.uk

Karl E. Brinkmann GmbH
Försterweg 36-38 • D-32683 Barntrup
ph: +49 5263 401-0 • fax: +49 5263 401-116
web: www.keb.de • mail: info@keb.de

KEB Italia S.r.l.
Via Newton, 2 • **I**-20019 Settimo Milanese (Milano)
ph: +39 02 33500782 • fax: +39 02 33500790
web: www.keb.it • mail: kebitalia@keb.it

KEB - YAMAKYU Ltd.
15–16, 2–Chome, Takanawa Minato-ku
J–Tokyo 108-0074
ph: +81 33 445-8515 • fax: +81 33 445-8215
mail: info@keb.jp

KEB Taiwan Ltd.
No.8, Lane 89, Sec.3; Taichung Kang Rd.
R.O.C.-Taichung City / Taiwan
ph: +886 4 23506488 • fax: +886 4 23501403
mail: info@keb.com.tw

KEB Korea Seoul
Room 1709, 415 Missy 2000
725 Su Seo Dong, Gang Nam Gu
ROK-135-757 Seoul/South Korea
ph: +82 2 6253 6771 • fax: +82 2 6253 6770
mail: vb.korea@keb.de

KEB Sverige
Box 265 (Bergavägen 19)
S-43093 Hälsö
ph: +46 31 961520 • fax: +46 31 961124
mail: vb.schweden@keb.de