MAGNETEK Power Regenerative Unit - RC5

Instruction Manual

Type: CIMR-R5U
Model: 200 V Class, 11 to 30 kW
400 V Class, 22 to 55 kW

To properly use the product, read this manual thoroughly and retain for easy reference, inspection, and maintenance. Ensure the end user receives this manual.

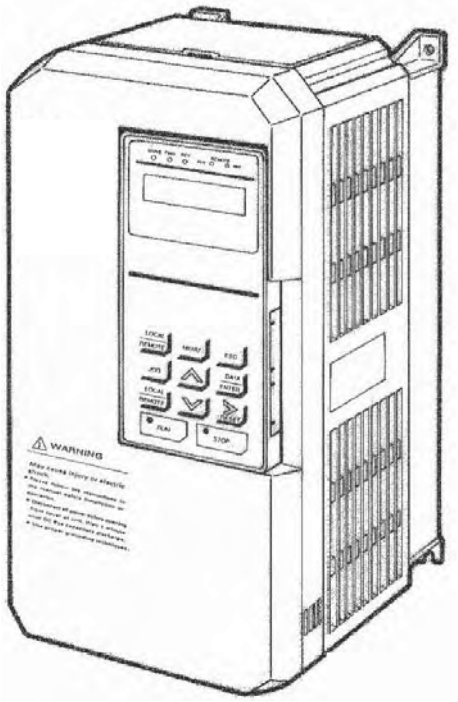

MAGNETEK

REGEN AC

TM7325 Rev 4

This Page Intentionally Blank

Copyright 2008 MAGNETEK, INC.
All rights reserved. No part of this publication may be reproduced, stored in a retrieval system, or transmitted, in any form or by any means, mechanical, electronic, photocopying, recording, or otherwise, without the prior written permission of the publisher.

i

Preface

Magnetek's RC5 is a power regenerative unit which has both braking and regenerative functions. This instruction manual describes installation, maintenance and inspection, troubleshooting, and specifications of the RC5. Read this instruction manual thoroughly before operation.

i.1 Conditions of Acceptability

In order to comply with NEC,CEC and L, the following conditions of use must be strictly adhered to:

♦ Surge Protector Installation

• An MOV must be installed on the input of the RC5 unit.

♦ Current Suppression Reactor Installation

• The Current Suppression Reactor must be installed as shown in ***Figure 3.1***.

♦ Terminal Block

• The Power Terminal Blocks of the RC5 unit are for factory wiring use only.

♦ End Use Enclosure

• The RC5 unit is to be installed in a suitable enclosure in the end use.

Read this instruction manual thoroughly before installation, operation, maintenance or inspection of the RC5. In this manual, NOTES FOR SAFE OPERATION are classified as “WARNING” or “CAUTION.”

i.2 Safety Information

General Precautions
• Some drawings in this manual are shown with the protective cover or shields removed, in order to describe detail with more clarity. Make sure all covers and shields are replaced before operating this product. • This manual may be modified when necessary because of improvement of the product, modification, or changes in specifications • Such modifications are denoted by a revision number. • To order a copy of this manual, if your copy has been damaged or lost, contact your MAGNETEK representative. • MAGNETEK is not responsible for any modification of the product made by the user, since that will void your guarantee.

WARNING
Read and understand this manual before installing, operating or servicing this drive. The drive must be installed according to this manual and local codes. The following conventions are used to indicate safety messages in this manual. Failure to heed this messages could result in serious or possibly even fatal injury or damage to the products or to related equipment and systems.

DANGER
Indicates a hazardous situation, which, if not avoided, will result in death or serious injury.

WARNING
Indicates a hazardous situation, which, if not avoided, will result in death or serious injury.

WARNING! *will also be indicated by a bold key word embedded in the text followed by an italicized safety message.*

CAUTION
Indicates a hazardous situation, which, if not avoided, will result in minor or moderate injury.

CAUTION! *will also be indicated by a bold key word embedded in the text followed by an italicized safety message.*

NOTICE
Indicates a property damage message.

NOTICE: *will also be indicated by a bold key word embedded in the text followed by an italicized safety message.*

Even items described in a Caution may result in a vital accident in some situations. In either case, follow these important notes.

Note: These are steps to be taken to insure proper operation.

i.3 Notes for Safe Operation

♦ Receiving

CAUTION

Do not install or operate any power regenerative unit which is damaged or has missing parts
Failure to observe this caution may result in personal injury or equipment damage (Refer to page *12*)

♦ Installation

CAUTION

Lift the cabinet by the base. When moving the unit, never lift by the front cover or the front panel.
Otherwise, the main unit may be dropped causing damage to the unit. (Refer to page *16*)

Mount the power regenerative unit on nonflammable material (i.e. metal).
Failure to observe this caution can result in a fire. (Refer to page *16*)

When mounting units in an enclosure, install a fan or other cooling device to keep the intake air temperature below 45ºC.
Overheating may cause a fire or damage to the unit. (Refer to page *16*)

In order to comply to UL regulations, the MOV and current suppression reactor must be installed on the input of the RC5 unit.
Refer to the installation diagram. (Refer to page *16*)

♦ Wiring

WARNING

Only commence wiring after verifying that the power supply is turned OFF.
Failure to observe this warning can result in a electric shock or a fire. (Refer to page *24*)

Wiring should be performed only by a qualified personnel.
Failure to observe this warning can result in an electric shock or a fire. (Refer to page *24*)

Make sure to ground the ground terminal before connecting the other terminals.
Failure to observe this warning can result in an electric shock ro a fire. (Refer to page *24*)

CAUTION

Verify that the power regenerative unit rated voltage coincides with the AC power supply voltage.
Failure to observe this caution can result in personal injury or a fire. (Refer to page *24*)

Do not perform a withstand voltage test of the power regenerative unit.
It may cause semi-conductor elements to be damaged. (Refer to page *24*)

Connect the power coordinating reactor and the power suppressing reactor as described in this instruction manual.
Improper connection may cause a fire. (Refer to page *24*)

Verify that the rated voltage of the power regenerative unit coincides with the rated voltage of the power regenerative unit to be connected.
Failure to observe this caution can result in a fire. (Refer to page *24*)

Tighten terminal screws.
Failure to observe this caution can result in a fire. (Refer to page *24*)

♦ Operation

⚠ WARNING

Only turn ON the input power supply after replacing the front cover or the terminal cover. Do not remove the cover while power is on.

Failure to observe this warning can result in an electric shock. (Refer to page *36*)

Never operate the digital operator or other switches when your hand is wet.

Failure to observe this warning can result in an electric shock. (Refer to page *36*)

Never touch the terminals while power is on, even if the power regenerative unit stops.

Failure to observe this warning can result in an electric shock. (Refer to page *36*)

⚠ CAUTION

Never touch the heatsink or input reactors since their temperature may be very high.

Failure to observe this caution can result in harmful burns to the body. (Refer to page *36*)

All the parameters of the power regenerative unit have been preset at the factory. Do not change the settings unnecessarily.

The power regenerative unit may be damaged. (Refer to page *36*)

♦ Maintenance and Inspection

⚠ WARNING

Never touch high-voltage terminals in the power regenerative unit.

Failure to observe this warning can result in an electric shock. (Refer to page *48*)

Perform maintenance or inspection only after verifying that the CHARGE LED goes OFF, after the main circuit power supply is turned OFF.

The capacitors are still charged and can be dangerous. (Refer to page *48*)

Only authorized personnel should be permitted to perform maintenance, inspections or parts replacement.

[Remove all metal objects (watches, bracelets, etc.) before operation.] (Use tools which are insulated against electric shock.)

Failure to observe this warning can result in an electric shock. (Refer to page *48*)

Never modify the product.

Failure to observe this warning can result in an electric shock ro personal injury and will invalidate the guarantee. (Refer to page *48*)

⚠ CAUTION

The power regenerative unit employs semi-conductor elements. Do not touch the CMOS elements.

They are easily damaged by static electricity. (Refer to page *48*)

Do not connect or disconnect wires or connectors while power is applied to the circuit.

Failure to observe this caution can result in personal injury. (Refer to page *48*)

♦ Warning Label

A warning label is displayed on the front cover of the power regenerative unit, as shown below. Follow these instructions when handling the power regenerative unit.

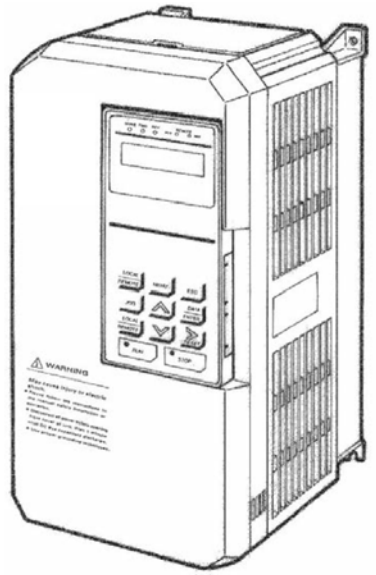

RC5 Regen Unit

- **Warning Label**

⚠ WARNING	- Risk of electric shock.
⚠	Read manual before installing. Wait 5 minutes for capacitor discharge after disconnecting power supply. To conform to CE requirements, make sure to ground the supply neutral.
⚠ AVERTISSEMENT	- Risque de décharge électrique
⚠	Lisez le manuel avant installation. Attendez 5 minutes après la coupure de l' alimentation électrique afin que les condensateurs soient complètement décharges. Assurez vous de connecter a la masse le fil du neutre afin d' être en accord avec la règlementation CE .
⚠	危　険　　- けが・感電のおそれがあります。
⚠	・据え付け、運転の前には必ず取扱説明書をお読み下さい。 ・通電中及び電源遮断後5分以内は表面カバーを外さないでください。 ・電源の中性点を接地して下さい。(CE 対応)

Table of Contents

1

Receiving

This chapter describes how to verify the RC5 after delivery to the user.

1.1 Section Safety

CAUTION

Do not install or operate any power regenerative unit which is damaged or has missing parts.
Failure to observe this caution may result in personal injury or equipment damage.

1.2 Inspection Checkpoints

♦ Receiving Checkpoints

Table 1.1 Checkpoints

Checkpoints	Description
Does the power regenerative unit model number correspond with the purchase order?	Check the model number on the nameplate on the side of the RC5. (Refer to ***Figure 1.2.***)
Are any part damaged?	Visually check the exterior and verify that there was no damage during transport.
Is hardware properly seated and securely tightened?	Remove the front cover of the power regenerative unit. Check all visible hardware with appropriate tools.

If any of the above checkpoints are not satisfactory, contact your MAGNETEK representative.

♦ Checking the Nameplate Data

▪ Nameplate Data

Example of standard domestic model CIMR-R5U2011.

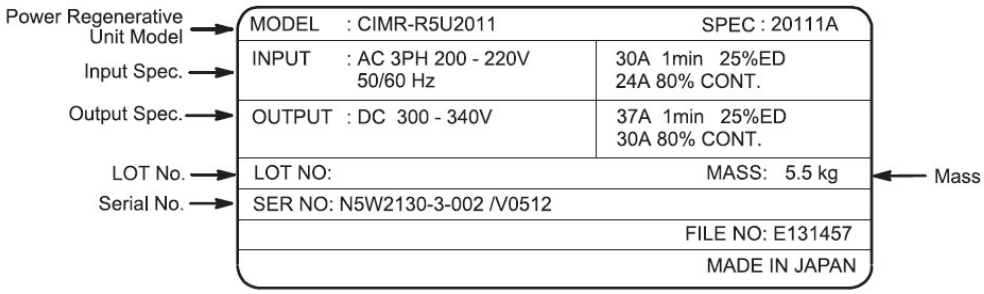

Figure 1.1 Nameplate Data

▪ Model Designation

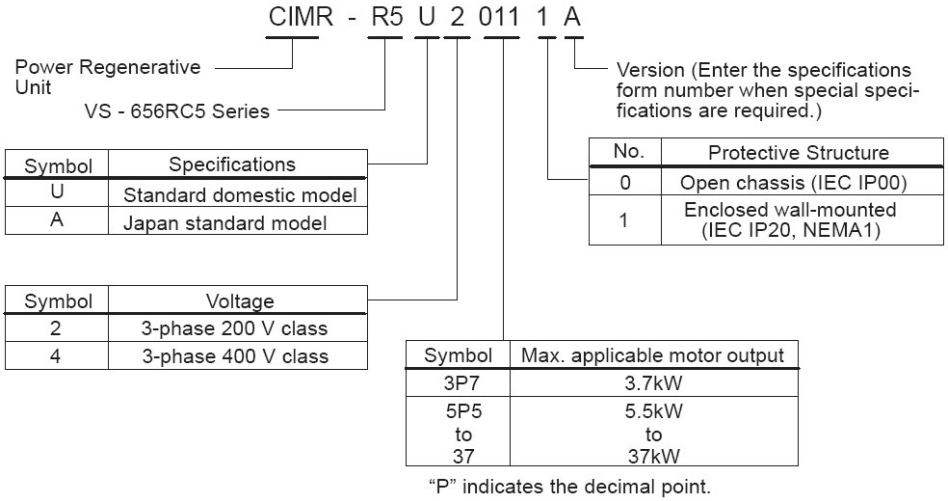

Figure 1.2 Model Designation

▪ Protective Structure

- Open Chassis Type (IEC IP00)
- Protected so that parts of the human body cannot reach electrically charged parts from the front when the Power regenerative unit is mounted in a control panel.
- Enclosed Wall-mounted Type (IEC IP20, NEMA 1)
- The power regenerative unit is structured so the power regenerative unit is shielded from the exterior, and can thus be mounted to the interior wall of a standard building (not necessarily enclosed in a control panel). The protective structure conforms to the standards of NEMA 1 in the USA.

This page is intentionally blank.

2

Installation

This chapter describes the configuration, location and space when mounting the RC5.

2.1 Section Safety

⚠ CAUTION

Lift the cabinet by the base. When moving the unit, never lift by the front cover or the front panel.
Otherwise, the main unit may be dropped causing damage to the unit.
Mount the power regenerative unit on nonflammable material (i.e. metal).
Failure to observe this caution can result in a fire.
When mounting units in an enclosure, install a fan or other cooling device to keep the intake air temperature below 45˚C.
Overheating may cause a fire or damage to the unit.

2.2 Checking Installation Site

♦ Installation Site

Install the power regenerative unit under the following conditions.

Type	Ambient Operating Temperature	Humidity
Enclosed wall-mounted	-10˚C to +40˚C	90% RH or less (no condensation)
Open chassis	-10˚C to +45˚C	90% RH or less (no condensation)

Protection covers are attached to the top and bottom of the power regenerative unit. Be sure to remove the protection covers before installing a 200 or 400 V Class power regenerative unit with an output of 30kW or less in a panel.

To ensure proper performance and long operating life, follow the recommendations below when choosing a location for installing the RC5. Make sure the power regenerative unit is protected from the following conditions:

- Extreme cold and heat.
  Use only within ambient temperature range: -10˚C to +40˚C
- Rain, moisture. (For enclosed wall-mounted type)
- Oil sprays, splashes
- Salt spray
- Direct sunlight. (Avoid using outdoors.)
- Corrosive gases or liquids.
- Dust or metallic particles in the air. (For enclosed wall-mounted type)
- Physical shock, vibration.
- Magnetic noise. (Example: welding machines, power devices, etc.)
- High humidity.
- Radioactive materials.
- Combustibles: thinners, solvents, etc.

♦ Controlling the Ambient Temperature

To enhance the reliability of operation, the power regenerative unit should be installed in an environment free from extreme temperature increases. If the power regenerative unit is installed in an enclosed environment, such as a box, use a cooling fan or air conditioner to maintain the internal air temperature below 45˚C.

♦ Protecting the Power Regenerative Unit from Foreign Matter

Place a cover over the power regenerative unit during installation to shield it from metal power produced by drilling.

Always remove the cover from the power regenerative unit after completing installation. Otherwise, ventilation will be reduced, causing the power regenerative unit to overheat.

2.3 Clearances

Install the RC5 vertically and allow sufficient clearances for effective cooling as shown in ***Figure 2.1.***

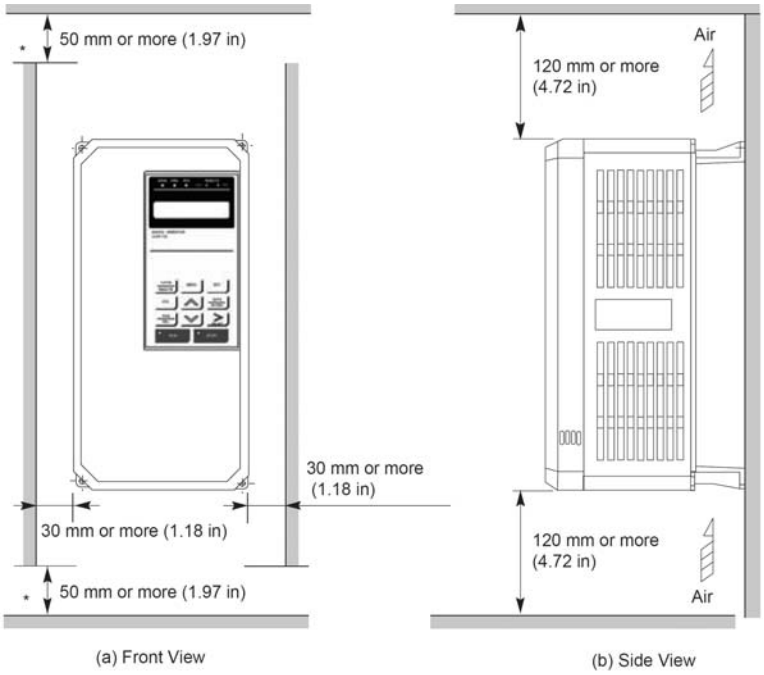

Figure 2.1 Clearances

Note: **1.** The clearances required at top/bottom and both sides are common in open chassis type (IP00) and enclosed wall–mounted type (NEMA 1).
2. Remove the top and bottom covers to use the open chassis type of 200 V/400 V 30 kW or less.
3. When installing the models of 200 V/400 V 37 kW or more equipped with eyebolts, extra spacing will be required on either side.
4. Ensure sufficient space for the sections at the upper and lower parts marked with * in order to permit the flow of intake/exhaust air to / from the unit.

2.4 Dimensions

♦ Models of 200 V/400 V 30 kW and Lower

Figure 2.2 shows a 200 V 3.7 kW model. Use open chassis type 200 V/400 V 30 kW and lower with the top and bottom covers removed.

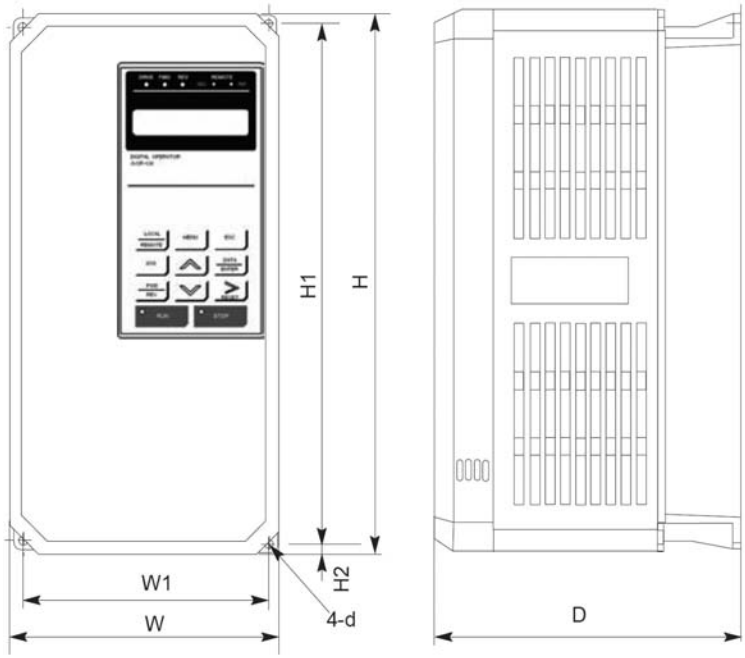

Figure 2.2 Dimensions of RC5

♦ Models of 200 V/400 V 37 kW and Higher

Figure 2.3 shows a 200 V 37 kW model.

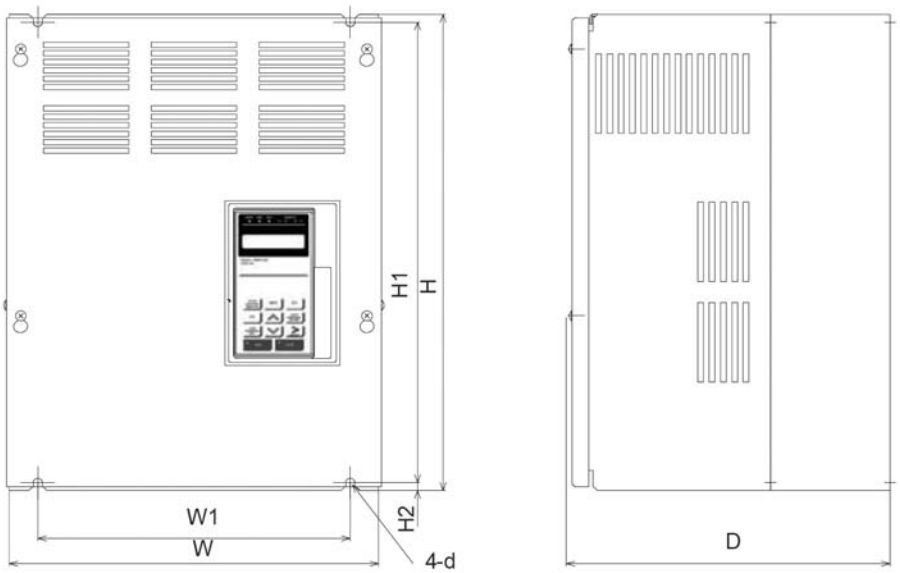

Figure 2.3

Voltage	CIMR -R5U	Dimensions mm (in)			Mounting Dimensions mm (in)			~Mass	Mounting	Enclosure
		W	H	D	W1	H1	H2	Kg	Hole	Type
200V Class	2015	200 (7.87)	300 (11.81)	205 (8.07)	186 (7.32)	285 (11.22)	8.0 (0.32)	6	M6	IP20
	2022	250 (9.84)	380 (14.96)	225 (8.86)	236 (9.29)	285 (11.22)	7.5 (0.30)	10	M6	IP20
	2030	250 (9.84)	400 (15.75)	225 (8.86)	236 (9.29)	365 (14.37)	27.5 (1.08)	11	M6	IP20
	2037	325 (12.80)	450 (17.72)	285 (11.22)	275 (10.83)	435 (17.13)	7.5 (0.30)	23	M6	IP00
400V Class	4030	250 (9.84)	380 (13.96)	225 (8.86)	236 (9.29)	365 (14.37)	7.5 (0.30)	10.5	M6	IP20
	4045	325 (12.80)	450 (17.75)	285 (11.22)	275 (10.83)	435 (17.13)	7.5 (0.30)	26	M6	IP00
	4055	325 (12.80)	635 (25.0)	285 (11.22)	275 (10.83)	610 (24.02)	7.5 (0.30)	34	M6	IP00
	4075	325 (12.80)	635 (25.0)	285 (11.22)	275 (10.83)	610 (24.02)	7.5 (0.30)	36	M6	IP00

Table 2.1 RC5 Dimensions mm (in) and Approximate Mass (kg)

♦ Reactor Dimensions

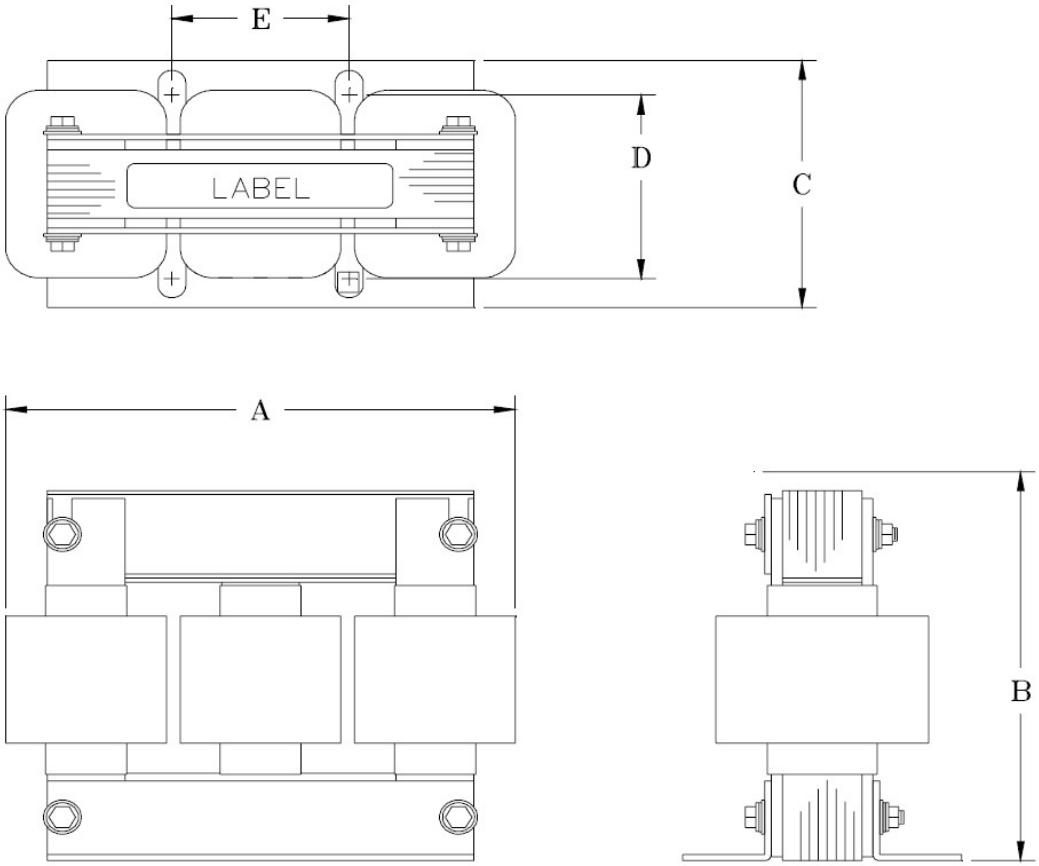

Figure 2.4 Dimensions of RC5 Reactors

Table 2.2 RC5 Reactor Dimensions mm (in) and Approximate Mass (kg)

Voltage	CIMR-R5U	Reactor for VFD						Reactor for RC5					
		Dimensions mm (in)			Mounting Dimensions mm (in)		~Mass	Dimensions mm (in)			Mounting Dimensions mm (in)		~Mass
		A	B	C	D	E	kg	A	B	C	D	E	kg
200V Class	2015	229 (9.0)	185 (7.3)	135 (5.3)	80.3 (3.16)	76.2 (3.0)	11	229 (9.0)	185 (7.3)	135 (5.3)	80.3 (3.16)	76.2 (3.0)	11
	2022	229 (9.0)	183 (7.2)	160 (6.3)	88.1 (3.47)	92.2 (3.63)	11	229 (9.0)	183 (7.2)	160 (6.3)	88.1 (3.47)	92.2 (3.63)	11
	2030	229 (9.0)	185 (7.3)	165 (6.5)	83.8 (3.3)	92.2 (3.63)	13	229 (9.0)	185 (7.3)	165 (6.5)	83.8 (3.30)	92.2 (3.63)	13
	2037	229 (9.0)	178 (7.0)	118 (4.7)	80.3 (3.16)	76.2 (3.00)	13	229 (9.0)	178 (7.0)	118 (4.7)	80.3 (3.16)	76.2 (3.00)	13
400V Class	4030	229 (9.0)	178 (7.0)	135 (5.3)	80.3 (3.16)	76.2 (3.00)	12	229 (9.0)	178 (7.0)	135 (5.3)	80.3 (3.16)	76.2 (3.00)	12
	4045	229 (9.0)	183 (7.2)	165 (6.5)	881 (3.47)	92.2 (3.63)	15	229 (9.0)	183 (7.2)	160 (6.3)	88.1 (3.47)	92.2 (3.63)	11
	4055	229 (9.0)	185 (7.3)	173 (6.8)	93 (3.66)	92.2 (3.63)	17	229 (9.0)	185 (7.3)	165 (6.5)	83.8 (3.30)	92.2 (3.63)	13
	4075	229 (9.0)	183 (7.2)	173 (6.8)	93 (3.66)	92.2 (3.63)	20	229 (9.0)	178 (7.0)	118 (4.7)	80.3 (3.16)	76.2 (3.00)	13

♦ Enclosure Dimensions

Enclosure includes RC5 unit, Reactor for VFD, Reactor for RC5, input fuses and surge protector all mounted in the enclosure. All internal connections between the previously stated items will be made. Terminal blocks at the bottom of the enclosure are provided for connections to the 3-phase building power, connections to the VFD, and Gnd. Accommodation is also made to mount directly to the side of an existing enclosure. Wiring access points are located through the rear of the panel in the lower area under the terminal blocks. In this application a lower pedestal mount is available to support the weight of the unit. This pedestal is 5.80in tall and will mount to the lower part of the box. The mounting holes are 0.5in at the top of the unit and slotted in the lower part of the box.

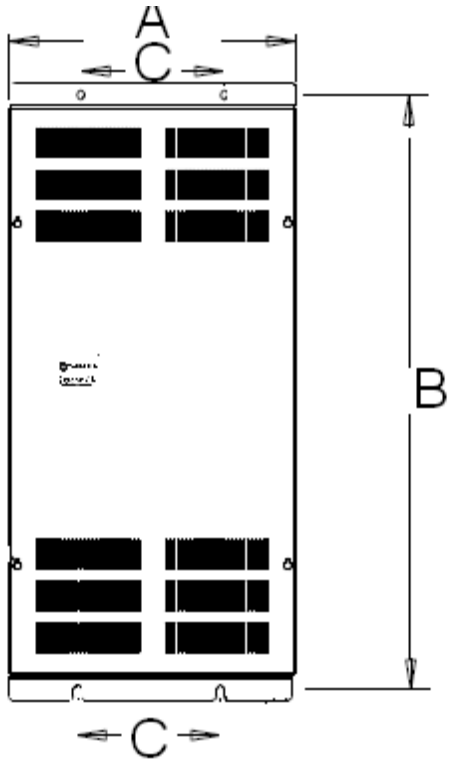

Figure 2.4 Dimensions of RC5 Reactors

Table 2.3 RC5 Enclosure Dimensions mm (in)

Voltage	CIMR-R5U	RC5 Enclosure Dimensions			
		Dimensions mm (in)		Mounting Dimensions mm (in)	
		A	B	C	Depth
200V Class	ENC-RC5-230-0401	470 (18.5)	930 (36.6)	229 (9)	322 (12.7)
	ENC-RC5-230-0601	470 (18.5)	930 (36.6)	229 (9)	322 (12.7)
	ENC-RC5-230-0801	470 (18.5)	1184 (46.6)	229 (9)	322 (12.7)
	ENC-RC5-230-1001	470 (18.5)	1184 (46.6)	229 (9)	322 (12.7)
400V Class	ENC-RC5-460-0401	470 (18.5)	930 (36.6)	229 (9)	322 (12.7)
	ENC-RC5-460-0601	470 (18.5)	930 (36.6)	229 (9)	322 (12.7)
	ENC-RC5-460-0751	470 (18.5)	1184 (46.6)	229 (9)	322 (12.7)
	ENC-RC5-460-1001	470 (18.5)	1184 (46.6)	229 (9)	322 (12.7)

2.5 Removing and Replacing the Front Cover

To remove the front cover, first move the LCD monitor/digital operator in the direction show by arrow 1. Then squeeze the cover in the direction shown by arrows 2 on both sides and lift in the direction shown by arrow 3.

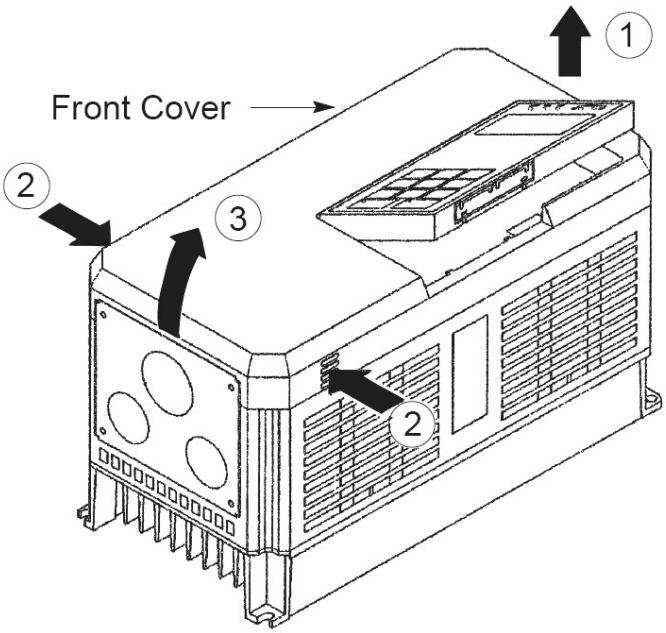

Figure 2.5 Removing and Replacing the Front Cover

Note: Do not replace the front cover with the LCD monitor/digital operator connected. The LCD monitor/digital operator will not be connected to the power regenerative unit. Replace the front cover first and then install the LCD monitor/digital operator on the cover. ***Refer to Removing and Replacing the LCD Monitor/Digital Operator on page 22*** for replace the LCD monitor/digital operator.

2.6 Removing and Replacing the LCD Monitor/Digital Operator

Remove and replace the LCD monitor/digial operator as follows.

♦ Removing the LCD Monitor/Digital Operator

Push the LCD monitor/digital operator lever in the direction shown by arrow 1 and lift the LCD monitor/digital operator in the direction shown by arrow 2 to remove the LCD monitor/digital operator from the front cover.

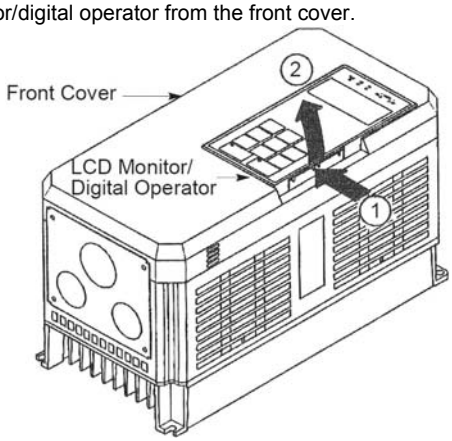

Figure 2.6 Removing the LCD Monitor/Digital Operator

♦ Replacing the LCD Monitor/Digital Operator

Engage the LCD monitor/digital operator on claws A in the direction shown by arrow and then on claws B in the direction shown by arrow 2 to lock the LCD monitor/digital operator.

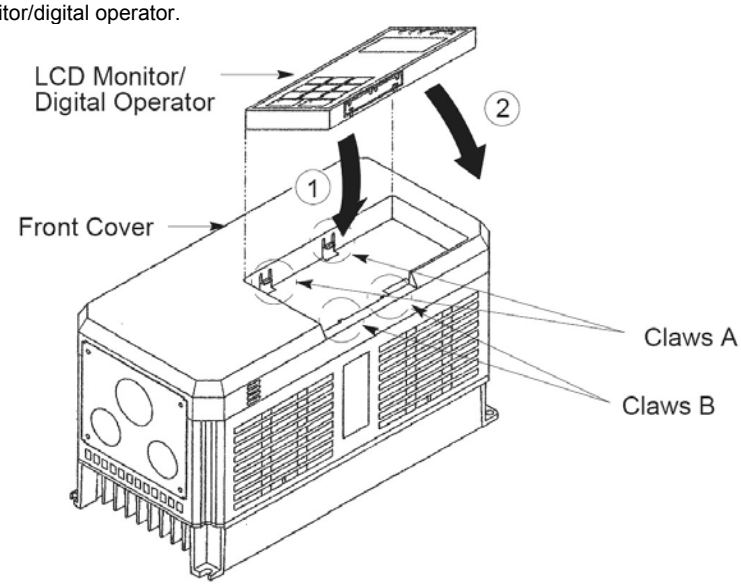

Figure 2.7 Replacing the LCD Monitor/Digital Operator

Note: Never fit the LCD monitor/digital operator in any other direction or by any other method. The LCD monitor/digital operator will not be connected to the inverter.

This page is intentionally blank.

3

Wiring

3.1 Section Safety

⚠ WARNING

Only commence wiring after verifying that the power supply is turned OFF.

Failure to observe this warning can result in an electric shock or a fire.

Wiring should be performed only by qualified personnel.

Failure to observe this warning can result in an electric shock or a fire.

Make sure to ground the ground terminal before connecting the other terminals.

Failure to observe this warning can result in an electric shock or a fire.

⚠ CAUTION

Verify that the power regenerative unit rated voltage coincides with the AC power supply voltage.

Failure to observe this caution can result in personal injury or a fire.

Do not perform a withstand voltage test of the power regenerative unit.

It may cause semi-conductor elements to be damaged.

Connect the power coordinating reactor and the power suppressing reactor as described in this instruction manual.

Improper connection may cause a fire.

Verify that the rated voltage of the power regenerative unit coincides with the rated voltage of the power regenerative unit to be connected.

Failure to observe this caution can result in a fire.

Tighten terminal screws.

Failure to observe this caution can result in a fire.

3.2 Connection Diagram

♦ Connection Diagram with Drive

Figure 3.1 shows a diagram of a typical connection of the RC5 with the Magnetek AC Drive.

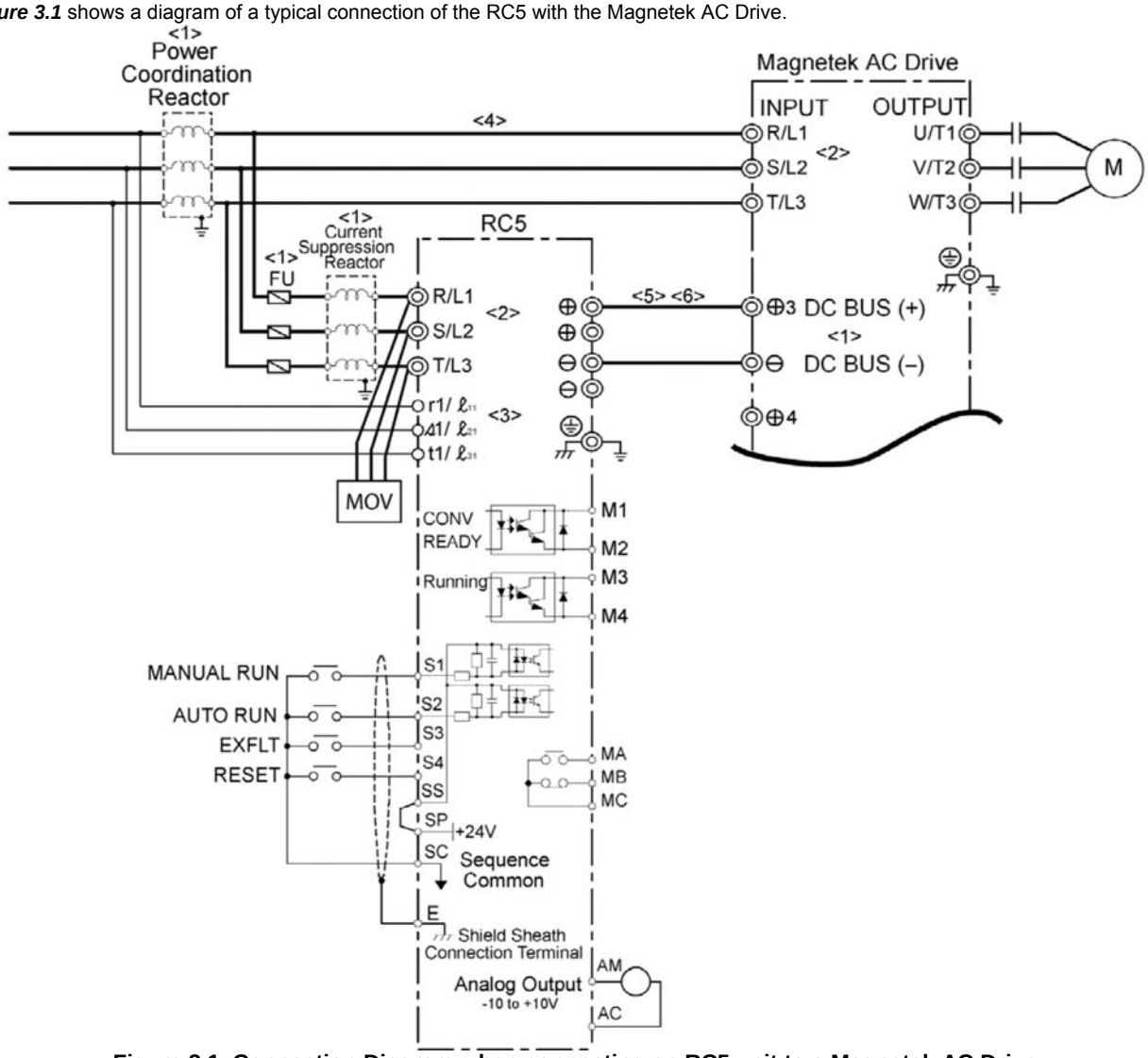

Figure 3.1 Connection Diagram when connecting an RC5 unit to a Magnetek AC Drive

<1> Use the specified fuses and fuse holders (Tables 3.1 or 3.2), and specified reactors (Table 3.3).

<2> Connect the Magnetek Drive Input Power terminals the secondary side of the Power Coordination Reactor. Connect the Magnetek RC5 Input Power Terminals to the secondary side of the Current Suppression Reactor.

<3> Connect Magnetek RC5 terminals r1/ℓ_{11}, s1/ℓ_{21}, and t1/ℓ_{31} to the primary side of the Power Coordination Reactor.

<4> The wiring distances between the Power Coordinating Reactor and the Magnetek RC5, and between the Power Coordination Reactor and the Magnetek Drive should be 10m or less.

<5> The DC BUS wiring distance between the Magnetek RC5 and Magnetek Drive should be 5m or less.

<6> If installing an emergency shutdown circuit breaker (or magnetic contactor)
on the DC BUS between the Magnetek RC5 and the Magnetek Drive, observe the
following precautions:

- Verify DC BUS is completely discharged prior to installation of emergency circuit breaker/contactor.
- The emergency breaker/contactor MUST be turned ON *before* the power is turned ON for the Magnetek RC5.
- If the emergency breaker/contactor is turned on while the DC BUS is charged, an overcurrent may occur and damage the emergency breaker/contactor.

♦ Connection Diagram with Enclosure

Figure 3.2 shows a diagram of a typical connection of the RC5 Enclosure with the Magnetek AC Drive.

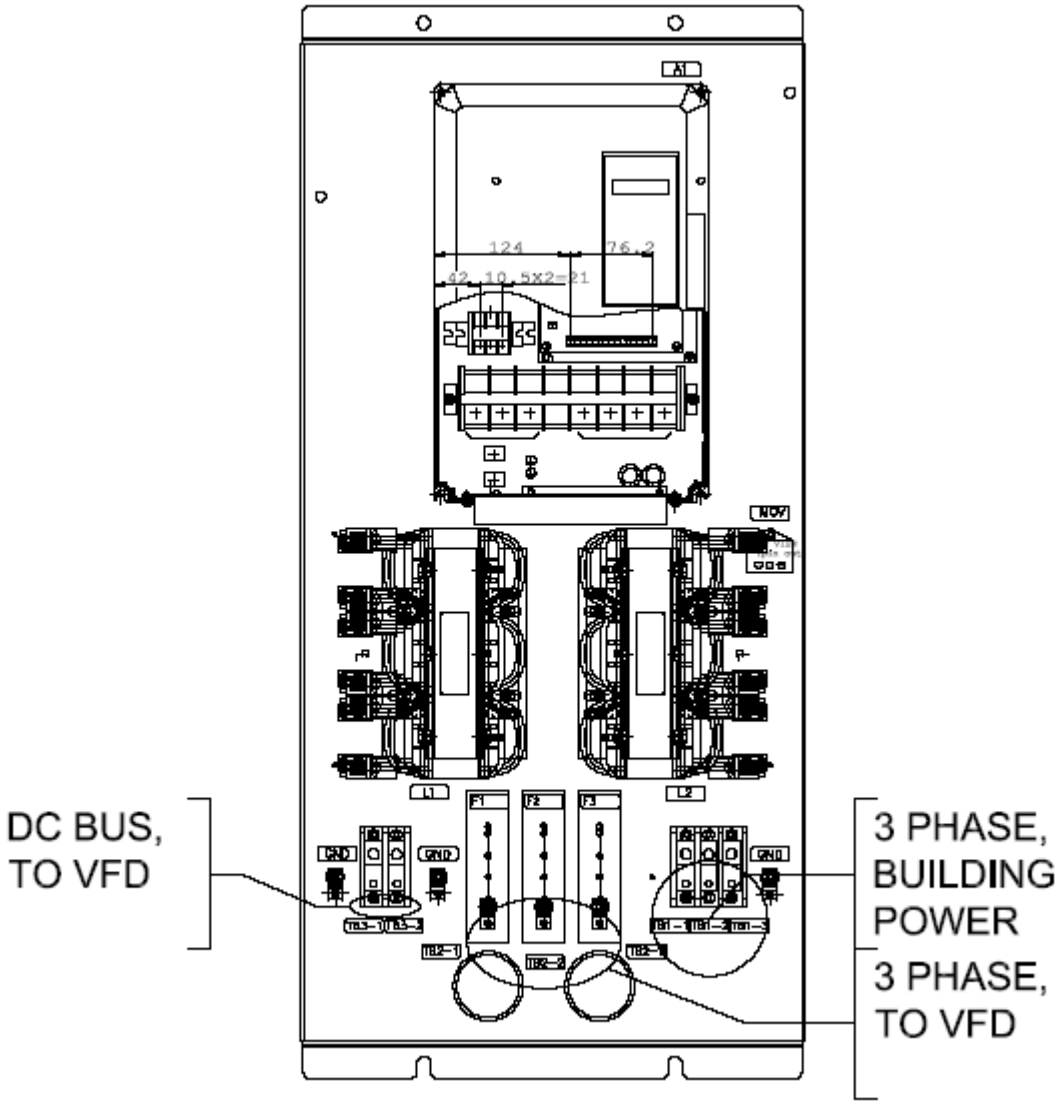

Figure 3.2 Connection Diagram when connecting an RC5 Enclosure to a Magnetek AC Drive

3.3 Selecting Peripheral Devices

♦ Selecting Heavy Duty or Standard Duty RC5 Application

The RC5 overload rating has the capability of 150% braking torque for 30 seconds and 200% peak braking torque. The overload capability is based on the standard duty rating. The RC5 overload rating can be applied to heavy duty applications. The following is a description of the heavy duty and standard duty ratings.

▪ Heavy Duty

Heavy duty applications require continuous energy dissipation (100% braking torque).

The overload rating is 125% for 60 seconds with a duty cycle of 25%. Braking torque of 187.5% is available for 30 seconds. Please note the peak torque should be less than 250%.

The RC5 requires selecting Power Coordination and Current Suppression reactors according to specifications in ***Table 3.3***.

▪ Standard Duty

Standard duty applications require intermittent full energy dissipation. The continuous rating is 80% or less braking torque and 100% braking torque for 60 seconds with a duty cycle of 25% (60 seconds maximum on-time of every 240 seconds). The overload rating is 150% braking torque for 30 seconds. Please note the peak torque should be less than 200%.

The RC5 requires selecting Power Coordination and Current Suppression reactors according to specifications in ***Table 3.3***

♦ Main Circuit Input Fuse

▪ Fuse Kits

The Fuse Kit is sized for both Heavy Duty and Standard Duty applications.

Connect a fuse at the primary side of the power suppression reactor. Recommended fuses are shown in ***Table 3.1*** and ***Table 3.2***.

Table 3.1 200 V Class Input Fuse

RC5			Input Fuse			Fuse Holder		
Model CIMR-R5U	Rated regenerative capacity (kW) 25%ED	Rated Input Current (Aac) 25%ED	Magnetek Part Number	Ferraz Part Number	Qty per Unit	Magnetek Part Number	Ferraz Part Number	Qty per Unit
20151A	11	40	05P00017-0600	A30QS80-4	3	05P00019-0175	P243	3
20221A	18	60	05P00017-0601	A30QS100-4	3	05P00019-0175	P243	3
20301A	22	80	05P00017-0602	A30QS150-4	3	05P00019-0175	P243	3
20371A	30	100	05P00017-0602	A30QS150-4	3	05P00019-0175	P243	3

Note: These fuses and fuse holders are made by FERRAZ

Table 3.2 400 V Class Input Fuse

RC5			Input Fuse			Fuse Holder		
Model CIMR-R5U	Rated regenerative capacity (kW) 25%ED	Rated Input Current (Aac) 25%ED	Magnetek Part Number	Ferraz Part Number	Qty per Unit	Magnetek Part Number	Ferraz Part Number	Qty per Unit
40301A	22	40	05P00017-0603	A50P80-4	3	05P00019-0176	P243E	3
40450A	37	60	05P00017-0604	A50P100-4	3	05P00019-0176	P243E	3
40550A	45	75	05P00017-0605	A50P150-4	3	05P00019-0176	P243E	3
40750A	55	100	05P00017-0605	A50P150-4	3	05P00019-0176	P243E	3

Note: These fuses and fuse holders are made by FERRAZ

♦ Power Coordination and Current Suppression Reactors

Both Power Coordination and Current Suppression Reactors are 3-phase input reactors that correspond to each RC5 model and are operating the RC5. Use a single Power Coordination and a single Current Suppression reactor for each RC5 application.

▪ Recommended RC5 Power Coordination and Suppression Reactor Specifications

Table 3.3 shows Magnetek recommended specifications for Power Coordination and Current Suppression reactors for each RC5 model.

Table 3.3 Recommended RC5 Power Coordination and Suppression Reactor Specifications

Voltage	CIMR-R5U	Power Coordination Reactor		Current Suppression	
		Magnetek Part No.	Inductor Specs	Magnetek Part No.	Inductor Specs
200V Class	2015	05P00620-0140	45A, 0.30mH	05P00620-0141	55A, 0.25mH
	2022	05P00620-0143	80A, 0.20mH	05P00620-0143	80A, 0.20mH
	2030	05P00620-0143	80A, 0.20mH	05P00620-0146	100A, 0.15mH
	2037	05P00620-0146	100A, 0.15mH	05P00620-0064	130A, 0.10mH
400V Class	4030	05P00620-0049	45A, 0.70mH	05P00620-0141	55A, 0.25mH
	4045	05P00620-0144	80A, 0.40mH	05P00620-0143	80A, 0.20mH
	4055	05P00620-0144	80A, 0.40mH	05P00620-0146	100A, 0.15mH
	4075	05P00620-0145	100A, 0.30mH	05P00620-0064	130A, 0.10mH

♦ Wiring Precautions

The external interconnection wiring must be performed with following procedures. After completing RC5 interconnections, be sure to check that the connections are correct. Never use control circuit buzzer check.

▪ **Precautions on Control Circuit Wiring**

- Separate control circuit wires from main circuit wires and other power cables to prevent erroneous operation caused by noise interference.
- Separate the wiring of control circuit terminals from other control terminals or main circuit wirings.
- Wiring distance should be less than 50 m.
- Insert the wire into the lower part of the terminal block and connect it tightly with a screwdriver. Wire sheath strip length must be 7 mm.

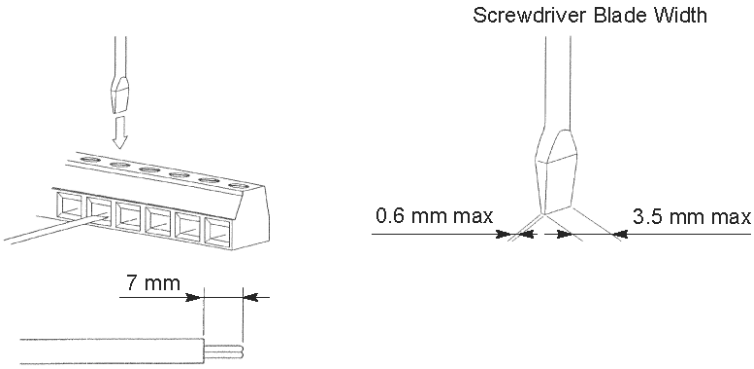

Figure 3.2 Control Circuit Terminal Wiring

▪ Use twisted shielded or twisted-pair shielded wire for the control circuit line and connect the shielded sheath to inverter terminal E. (See ***Figure 3.3***)

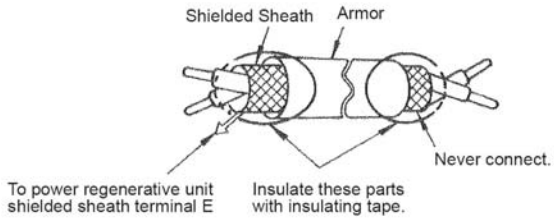

Figure 3.3 Shielded Wire Termination

▪ Ground Wiring

- Do not share the ground wire with other devices, such as welding machines or power tools. Separate the grounding cables from the wirings for power tools.
- Always use a ground wire that complies with technical standards on electrical equipment and minimize the length of the ground wire. Leakage current flows through the power regenerative unit. Therefore, if the distance between the ground electrode and the ground terminal is too long, potential on the ground terminal of the power regenerative unit will become unstable.
- When using more than one power regenerative unit, be careful not to loop the ground wire.

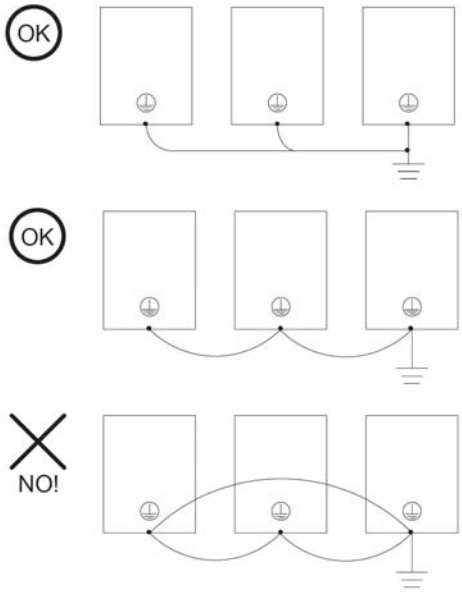

Figure 3.4 Ground Wiring

3.4 Wiring Main Circuit Terminals

♦ Required Wire Size

Select wires to be used for wiring 200V Class Units per those found in Table 3.4.

Table 3.4 200V Class Wire Size

Circuit	RC5 CIMR-R5U	Terminal Symbol	Terminal Screw	Wire Size <1>		Wire Type
				mm^2	AWG	
Main	2015	R/L1, S/L2, T/L3, (+), (+), (-), (-)	M5	8	8	Power cable: 600V vinyl sheathed wire or equivalent
		r1/ℓ11, ⅄1/I21, t1/ ℓ31		2 to 5.5	14 to 10	
		⏚		5.5 to 8	10 to 8	
	2022	R/L1, S/L2, T/L3, (+), (+), (-), (-)	M8	22	4	
		r1/ℓ11, ⅄1/I21, t1/ ℓ31	M4	2 to 5.5	14 to 10	
		⏚	M6	8	8	
	2030	R/L1, S/L2, T/L3, (+), (+), (-), (-)	M8	30 to 38	3 to 2	
		r1/ℓ11, ⅄1/I21, t1/ ℓ31	M4	2 to 5.5	14 to 10	
		⏚	M6	14	6	
	2037	R/L1, S/L2, T/L3, (+), (+), (-), (-)	M8	50 to 60	1 to 1/0	
		r1/ℓ11, ⅄1/I21, t1/ ℓ31	M4	2 to 5.5	14 to 10	
		⏚	M6	14	6	
Control	Common to all models	S1, S2, S3, S4, SS, SP, SC, M1, M2, M3, M4, MA, MB, MC, AM,AC	-	twisted wire: 0.5 to 1.25 single wire: 0.5 to 1.25	twisted wired: 20 to 16 single wire: 20 to 16	Shielded twisted-pair wires
		E (G)	M3.5	0.5 to 2	20 to 14	

<1> Wire Size is determined by 75°C temperature copper wire

Note: Cable size is selected assuming external wiring of single 3-core cables at an ambient temperature of 30°C.

Note: For Model number 2015, use closed-loop connectors that are recommended by JST (JST-14-5).

♦ Required Wire Size

Select wires to be used for wiring 400V Class Units per those found in Table 3.5.

Table 3.5 400V Class Wire Size

Circuit	RC5 CIMR-R5U	Terminal Symbol	Terminal Screw	Wire Size <1>		Wire Type
				mm^2	AWG	
Main	4030	R/L1, S/L2, T/L3, (+), (+), (-), (-)	M6	14	6	Power cable: 600V vinyl sheathed wire or equivalent
		r1/ℓ11, ⅄1/I21, t1/ ℓ31	M4	2 to 5.5	14 to 10	
		⏚	M6	8	8	
	4045	R/L1, S/L2, T/L3, (+), (+), (-), (-)	M8	22 to 38	4 to 2	
		r1/ℓ11, ⅄1/I21, t1/ ℓ31	M4	2 to 5.5	14 to 10	
		⏚	M6	8	8	
	4055	R/L1, S/L2, T/L3, (+), (+), (-), (-)	M8	30 to 60	2 to 1/0	
		r1/ℓ11, ⅄1/I21, t1/ ℓ31	M4	2 to 5.5	14 to 10	
		⏚	M6	14	6	
	4075	R/L1, S/L2, T/L3, (+), (+), (-), (-)	M8	50 to 60	1 to 1/0	
		r1/ℓ11, ⅄1/I21, t1/ ℓ31	M4	2 to 5.5	14 to 10	
		⏚	M6	14	6	
Control	Common to all models	S1, S2, S3, S4, SS, SP, SC, M1, M2, M3, M4, MA, MB, MC, AM,AC	-	twisted wire: 0.5 to 1.25 single wire: 0.5 to 1.25	twisted wired: 20 to 16 single wire: 20 to 16	Shielded twisted-pair wires
		E (G)	M3.5	0.5 to 2	20 to 14	

<1> Wire Size is determined by 75°C temperature copper wire

Note: Cable size is selected assuming external wiring of single 3-core cables at an ambient temperature of 30°C.

♦ Closed-Loop Connectors Size

Table 3.6 Closed Loop Connectors Sizes (JIS C 2805) (For 200 V/400 V classes)

Wire Size		Terminal Screw	Tightening Torque (N•m)	Closed Loop Connectors
mm^2	AWG			
0.5	20	M3.5 M4	0.8 to 1.0 1.2 to 1.4	1.25 to 3.5 1.25 to 4
0.75	18			
1.25	16			
2	14	M4	1.2 to 1.4	2 to 4
		M5	2.1 to 2.5	2 to 5
3.5	12	M4	1.2 to 1.4	3.5 to 4
		M5	2.1 to 2.5	3.5 to 5
5.5	10	M4	1.2 to 1.4	5.5 to 4
		M5	2.1 to 2.5	5.5 to 5
8	8	M5	2.1 to 2.5	8 to 5
		M6	3.6 to 5.1	8 to 6
14	6	M6	3.6 to 5.1	14 to 6
22	4	m8	8.2 to 10.2	22 to8
30/38	3/2	M8	8.2 to 10.2	38 to 8
30/38	3/2	M10	18 to 23	38 to 10
50/60	1/1/0			60 to 10
80	3/0			80 to 10
100	4/0			100 to 10
100	4/0	M12	31.5 to 39.5	100 to 12
150	300			150 to 12
200	400			200 to 12

Note: Determine the wire size for the main circuit so that line voltage drop is within 2% of the rated voltage. Line voltage drop is calculated as follows:
(If there is a possibility of excessive voltage drop, use a larger wire suitable to the required length.)
Line voltage drop (V) = $\sqrt{3}$ x wire resistance (Ω/km) x wire length (m) x current (A) x 10^{-3}

3.5 External Terminals

♦ Main Circuit Terminal Functions

Table 3.7 Main Circuit Terminal Functions

Terminal Symbol		Description
R/L1 S/L2 T/L3	Power Regenerative Unit Main Circuit Input	Main circuit AC power supply terminal for the power regenerative unit.
(+), ⊖		Connect to the Drive's DC power supply voltage input terminals. • Two terminals are provided for both (+) and ⊖
r1/ℓ11, s1/ ℓ21 t1/ ℓ31	Power supply Voltage Detection	Detects the phase sequence and the voltage level. • Connect to the power side of the power coordinating reactor.
	Power Input for FAN and MC	Supplies power for the cooling fan and inrush prevention MC of the power regenerative unit.

♦ Control Circuit Terminal Functions

Table 3.8 Control Circuit Terminal Functions

Type	No. <1>	Signal Input	Function	Function	Signal Level
Sequence Input	S1	MANUAL RUN	Run when CLOSED, stops when OPEN		24 VDC 8mA Photocoupler isolation
	S2	AUTO RUN	Auto run (regenerative operation) when CLOSED		
	S3	EXTERNAL FAULT INPUT	External fault when CLOSED	Multi-function Contact Inputs (H1-01 to H1-02)	
	S4	FAULT RESET INPUT	Fault reset when CLOSED		
	SC	Sequence Common			
	SS	Photocoupler internal common			
	SP	Sequence +24V Power Supply			
Photocoupler Output	M1-M2	CONV READY	Closed when power regenerative unit is READY	H2-01 to H2-02	48 VDC 80 mA or less
	M3-M4	RUN	CLOSE during run		
Relay Output	MA-MC MB-MC	FAULT Output	Outputs when a fault is detected. Terminal MA-MC: Closed during fault detection Terminal MB-MC: Open during fault detection	Outputs when a fault is detected. Terminal MA-MC: Closed during fault detection Terminal MB-MC: Open during fault detection	250 VAC 1 A or less 30 VDC 1 A or less
Analog Output	AM	Input Current	5 V: 100% of rated input current	Multi-function Analog Output (H1-04)	-10 V to + 10 VDC 2 mA or less
	AC	Analog Ground			

<1> Indicates the terminal number of the control card.

3.6 Drive / Reactor Heat Loss

♦ **Heat Loss**

Table 3.9 Drive and Reactor Heat Loss

Voltage	CIMR-R5U	Drive Heat Loss (Watts)	VFD Reactor Heat Loss (Watts)	RC5 Reactor Heat Loss (Watts)	Total Heat Loss (Watts)
200V Class	2015	330	54	64	448
	2022	500	82	82	664
	2030	630	82	94	806
	2037	830	94	108	1032
400V Class	4030	350	62	64	476
	4045	550	86	82	718
	4055	730	86	94	910
	4075	860	84	108	1052

4

Operation

4.1 Section Safety

⚠ WARNING

Only turn ON the input power supply after replacing the front cover or the terminal cover. Do not remove the cover while power is on.

Failure to observe this warning can result in an electric shock.

Never operate the digital operator or other switches when your hand is wet.

Failure to observe this warning can result in an electric shock.

Never touch the terminals while current is flowing, even if the power regenerative unit stops.

Failure to observe this warning can result in an electric shock.

⚠ CAUTION

Never touch the heatsink or input reactors since their temperature may be very high.

Failure to observe this caution can result in harmful burns to the body.

All the constants of the power regenerative unit have been preset at the factory. Do not change the settings unnecessarily.

The power regenerative unit may be damaged.

4.2 Checks Prior to Main Power Application

Check the following before turning ON the power supply.

- Check that the power supply is of the correct voltage.
  200 V class: 200 to 230 VAC, 50/60 Hz
  400 V class: 380 to 460 VAC, 50/60 Hz
- Make sure that the power regenerative unit and the Dirve are connected correctly.
- Make sure that the phase sequence of the main circuit terminals (R/L1, S/L2, T/L3) and the power supply voltage detection terminals (r1/ℓ11, s1/ℓ21, t1/ℓ31) are correct.
- Make sure that the power regenerative unit and the control device are wired correctly.
- Set the run command of the power regenerative unit and the drive to OFF.

4.3 Setting the Power Supply Voltage Jumper

Note: 400 V CLASS REGENERATIVE UNITS OF 37 kW OR HIGHER

Set the power supply voltage jumper for 400 V class power regenerative unit of 37 kW or higher. Insert the jumper into the voltage connector nearest
to the actual power supply voltage.
Incorrect connector setting may negatively impact the performance of the power regenerative unit.
The jumper is factory-set to 460 V when shipped. If the power supply voltage is not 460 V, use the following procedure to change the setting.

1. Turn OFF the power supply switch and wait for at least five minutes before removing the front panel and setting the jumper.
2. Remove the front cover.
3. Insert the jumper at the position for the voltage supplied to the power regenerative unit (see ***Figure 4.1***).
4. Replace the front cover.

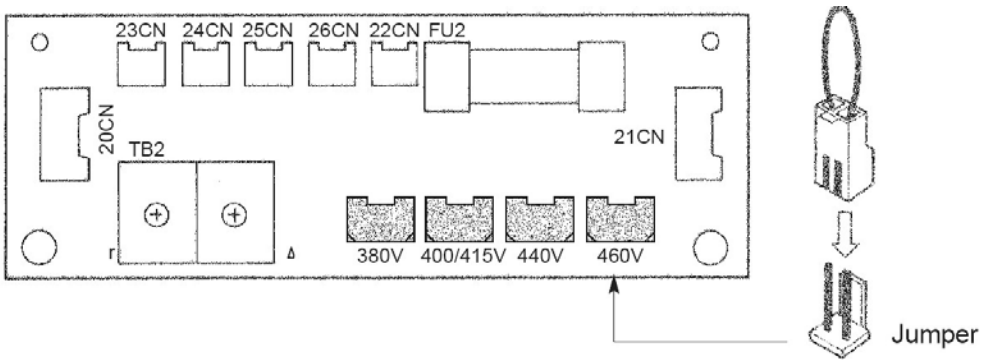

Figure 4.1 Setting the Power Supply Voltage (For 400 V Class Power Regenerative Unit between 37 kW and 75 kW)

4.4 Using the Digital Operator

This section describes the component names and functions of the Digital Operator. The component names and functions are shown in ***Figure 4.2*** and Key function are described in ***Table 4.1***.

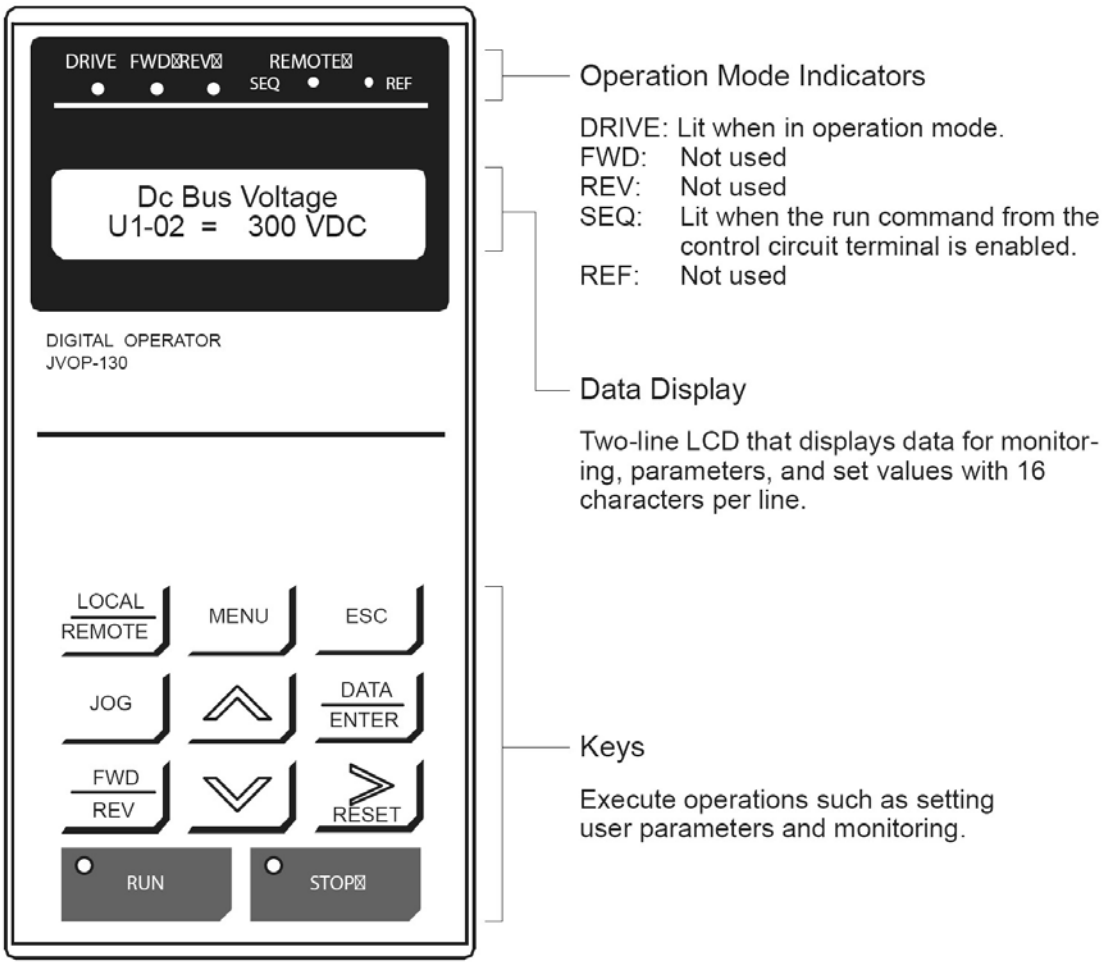

Figure 4.2 Digital Operator Component Names and Functions

Table 4.1 Key Function

Key	Name	Function
LOCAL REMOTE	LOCAL/REMOTE Key	Switches between operation (LOCAL) via the Digital Operator and control circuit terminal (REMOTE) operation. This key can be enabled or disabled by setting o2-01.
MENU	MENU Key	Displays menus
ESC	ESC Key	Returns to the status before the DATA/ENTER Key was pressed.
JOG	JOG Key	Not Used
FWD REV	FWD/REV Key	Not Used.
RESET	RESET Key	Set the number of digits for parameter settings. Also acts as the reset Key when a fault has occurred
∧	Increment Key	Selects menu items, groups, functions, and parameter names, and increments set values.
∨	Decrement Key	Selects menu items, groups, functions, and parameter names, and decrements set values.
DATA ENTER	DATA/ENTER Key	Enters menu items, functions, parameters, and set values after they are set.
RUN	RUN Key	Starts the RC5 operation when the RC5 in operation with the Digital Operator
STOP	STOP Key	Stops RC5 operation. This key can be enabled or disabled by setting o2-02 when operating from the control circuit terminal.

Note: Except diagrams, keys are referred to using the key names listed in the above table.

4.5 Digital Operator Modes

This section describes the RC5's monitor modes, switching between modes, and accessing/setting user parameters.

♦ Modes

The RC5's user parameters and monitoring functions have been organized in groups called modes that make it easier to read and set user parameters. The RC5 is equipped with 4 modes, as shown in ***Table 4.2***.

Table 4.2 Modes

Mode	Primary function(s)
Operation mode	The power regenerative unit can be run in this mode. Use this mode when monitoring values such as frequency references or output current, displaying fault information, or displaying the fault history.
Initialize mode	Use this mode when selecting the language displayed on the Digital Operator, selecting the access level for reading/setting user parameters, selecting the control mode, or initializing the user parameters. Factory setting: English (A1-00=0)
Programming mode	Use this mode when reading/setting the user constants required for operation. The program mode functions are subdivided into the following groups: Application: Operation mode selection Tuning: No Auto-Tuning Option: No Option Card support Terminal: Settings for sequential I/O and analog I/O Protection: Settings for the motor and power regenerative unit protection function Operator: Selects the Digital Operator's display and Key function
Modified constants mode	Use this mode to read/set user parameters that have been changed from their factory set values.

♦ Navigating Digital Operator Modes

Once the power regenerative unit has been put into operation mode by pressing the Menu Key, the Increment and Decrement Keys can be pressed to switch to other modes. Press the DATA/ENTER Key to read/set the user parameters in each mode.

Press the ESC Key to return to the mode display from the user parameter display.

Press the DATA/ENTER Key twice to write a parameter and then press the ESC Key to return to the mode display. This is the most Basic operation, so you should remember it.

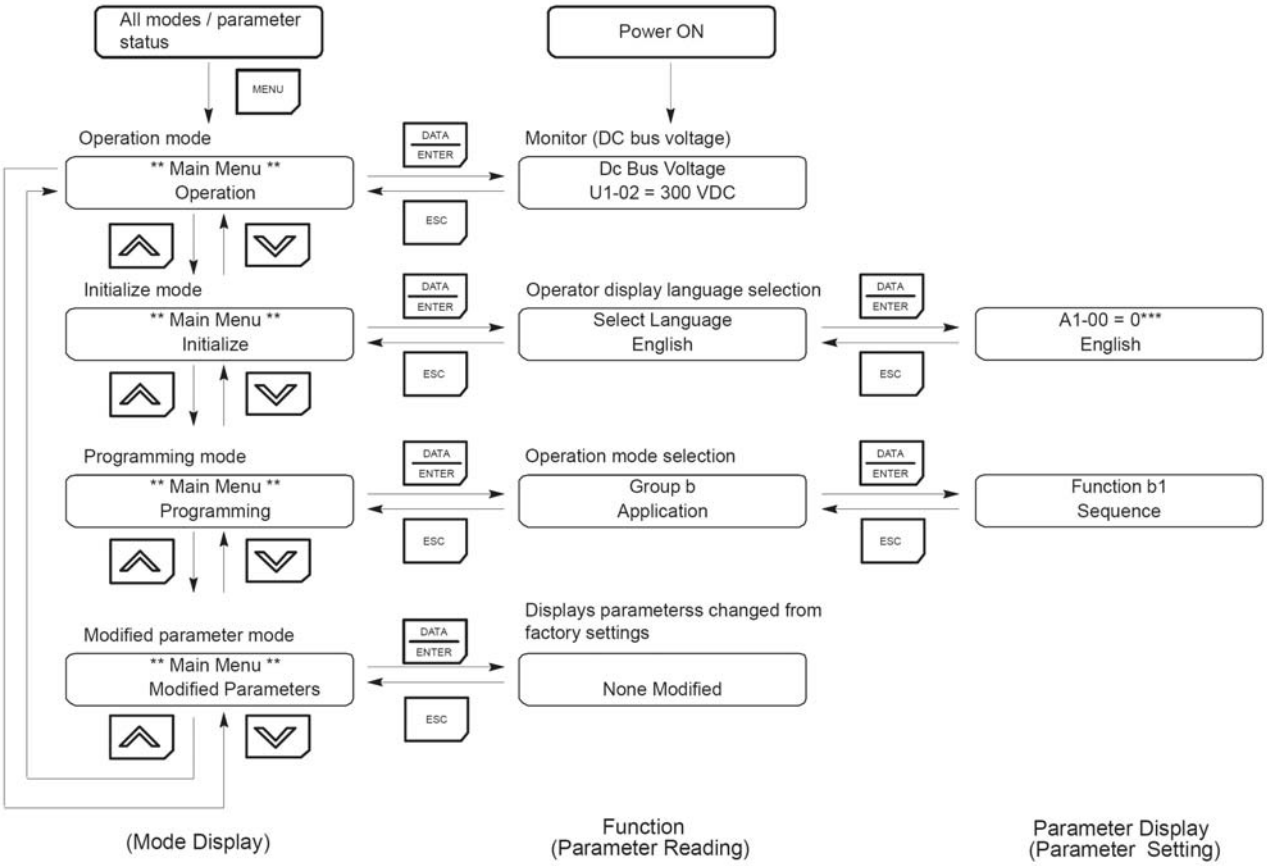

Figure 4.3 Mode Transitions

Note: When running the power regenerative unit after using the digital operator, press the MENU Key to enter the operation mode and then press the DATA/ENTER Key from the operation mode display to bring up the monitor display. Run commands can't be received from any other display. (Monitor display in the operation mode appears when the power is turned ON.)

- **Parameter Setting Example**

The group level will be displayed when the DATA/ENTER Key is pressed at the programming mode display.

Step	Key Sequence	Digital Operator Display	Remarks
1	MENU	** Main Menu ** Operation	
2	∧ Press twice.	** Main Menu ** Programming	
3	DATA/ENTER	Group b Application	
4	DATA/ENTER	Function b1 Sequence	Changed to parameter reading (function) level.
5	DATA/ENTER	Run Source Terminals	
6	DATA/ENTER	b1-02 = 1*** Terminals	
7	∧ Press twice.	b1-02 = 0 Operator	
8	DATA/ENTER	Entry Accepted	Writes-in the new setting.
		Run Source Operator	After a few seconds, the operator display is as shown on the left.
9	ESC	Function b1 Sequence	

The parameter setting has been completed (operation mode has changed from the external terminals to the operator).

♦ Operation Mode

Operation mode is the mode in which the power regenerative unit can be operated.
Many user parameters can't be changed when the power regenerative unit is operating.

Viewing monitor displays, fault information and fault history are possible in operation mode.

Note: When running the power regenerative unit after using digital operator, press the MENU Key to enter the operation mode and then press the DATA/ENTER Key from the operation mode display to bring up the monitor display. Run commands can't be received from any other display. (Monitor display in the operation mode appears when the power is turned ON.)

▪ Operations in Operation Mode

Key operations in operation mode are shown in ***Figure 4.4***.

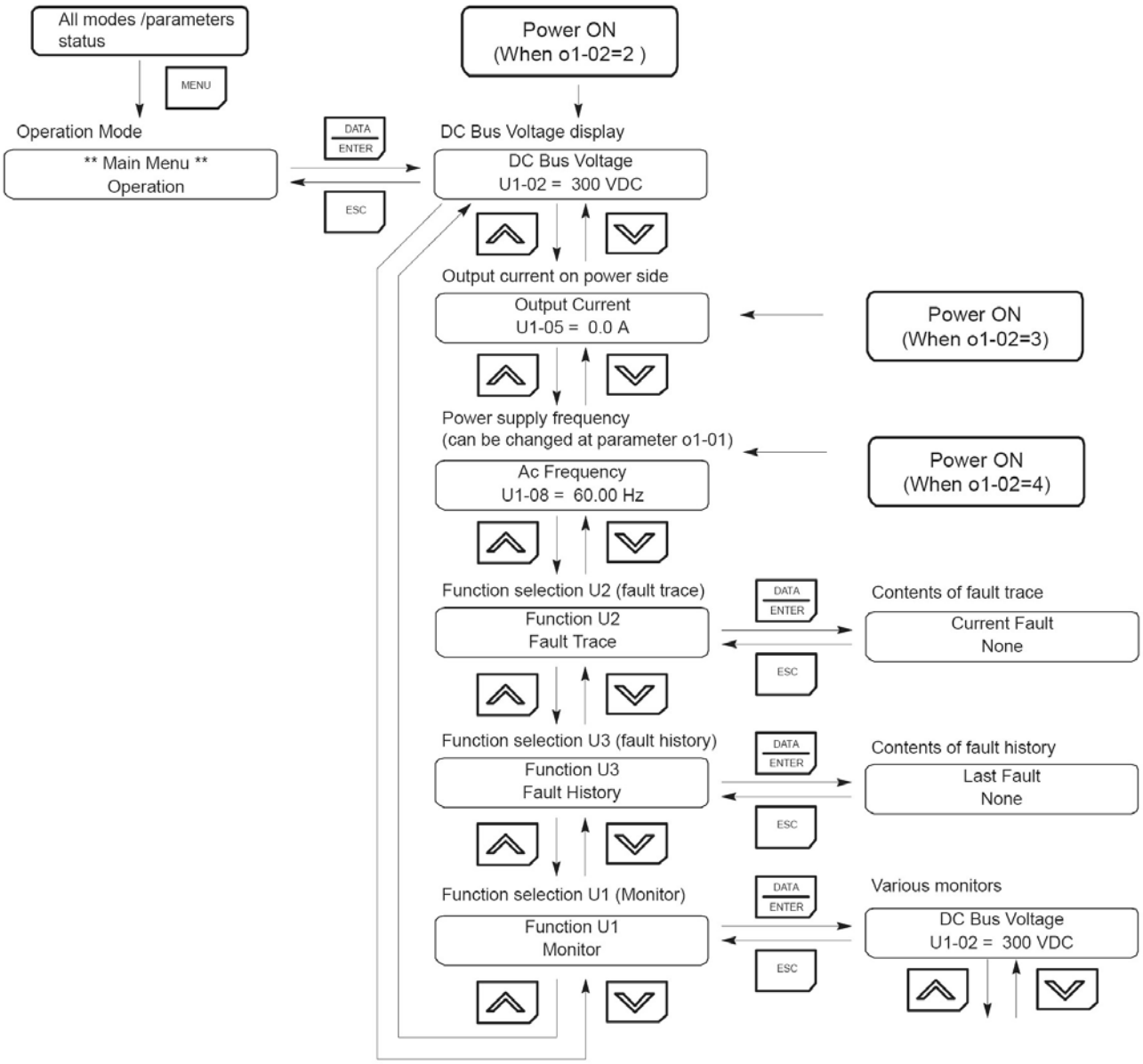

Figure 4.4 Operations in Operation Mode

4.6 Power On/Off Sequence

Refer to ***Figure 4.5*** when building a power ON/OFF sequence for the RC5.

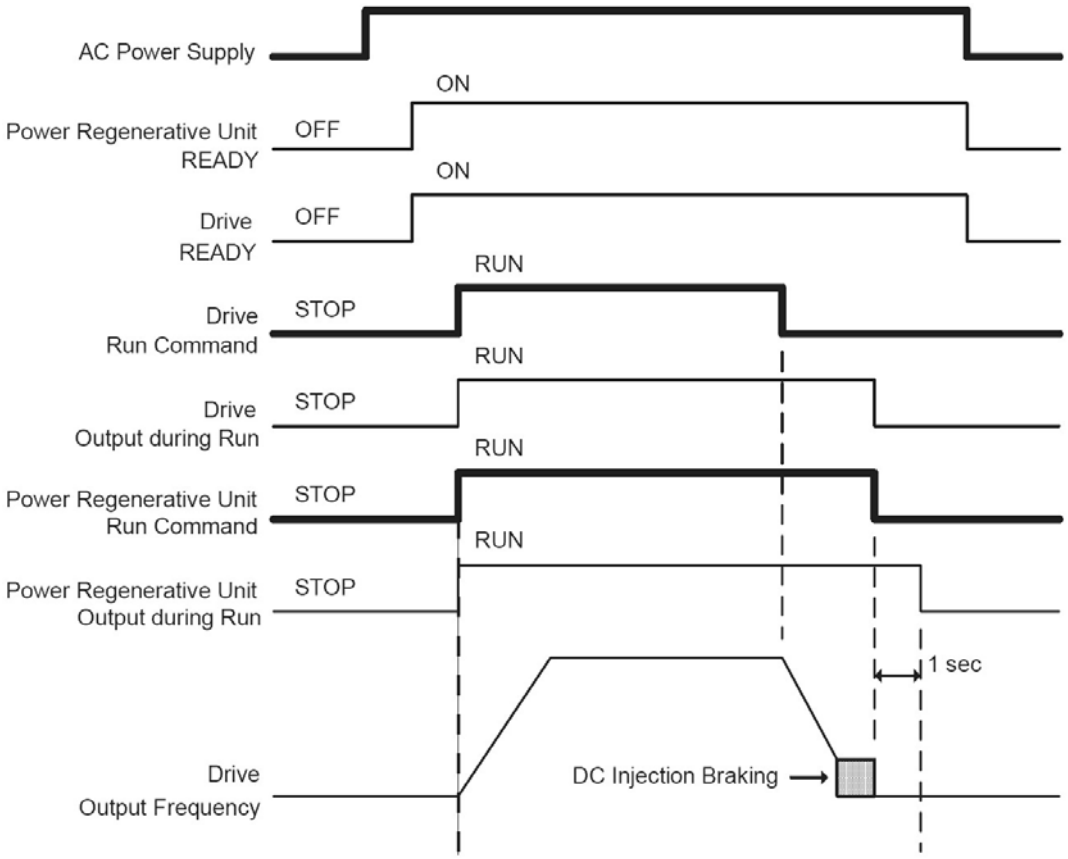

Figure 4.5 Power Supply ON/OFF Sequence

Check the following when using the power regenerative unit.

- Run commands of the drive and the power regenerative unit should be turned ON after confirming that the drive and the power regenerative unit are READY.
- Run commands of the drive and the power regenerative unit should be turned ON at the same time.
- Never turn the run command of the power regenerative unit OFF while the drive output during run is ON.
- Run output of the power regenerative unit turns OFF one second after the run command is turned OFF.
- Turn the power OFF after the run output of the power regenerative unit is OFF.

4.7 Run Command Selection

This section explains the two run command modes of the power regenerative unit. Select the mode according to the application.

♦ Auto Run

Auto run is the mode in which the power regenerative unit detects any increase/decrease of the bus voltage and performs an auto run/stop if the terminal S2-SC is “closed.”

When the DC voltage is less than the voltage set at the auto run/stop level, the RC5 will stop after the preset time value in parameter C8-20 is passed (default: 1 sec).

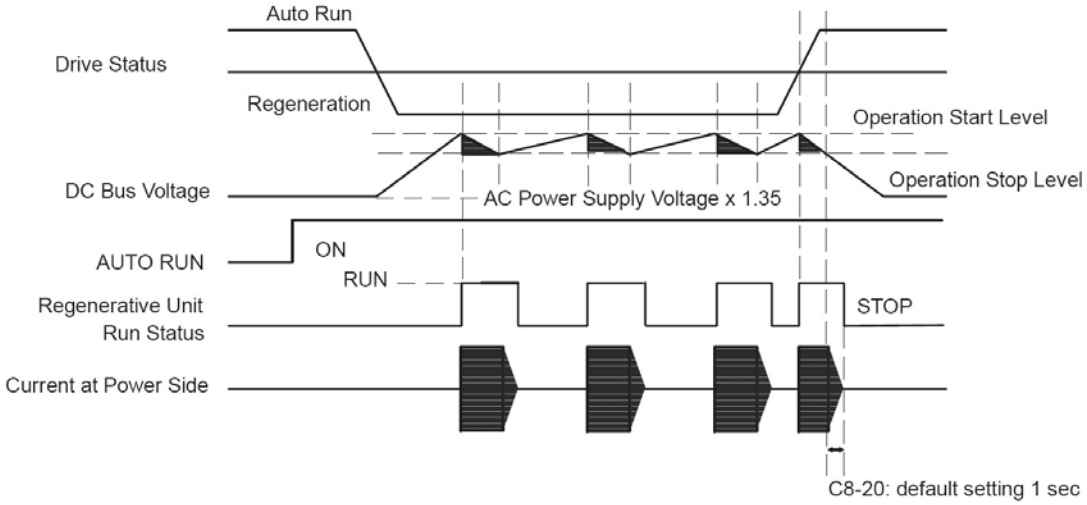

Figure 4.6 Time chart of the Auto Run Mode

♦ Manual Run

Manual run is the mode in which the RC5 starts running when the terminal S1-SC is “closed,” and stops one second after S1-SC is “open.”

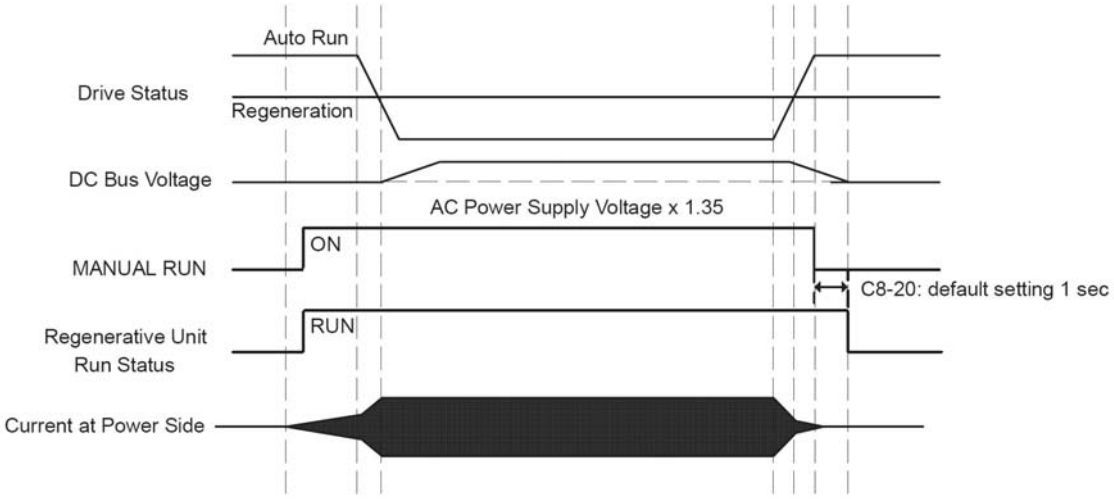

Figure 4.7 Time chart of the Manual Run mode

Build a sequence so that the run commands of the power regenerative unit and the inverter are turned ON at the same time.

5

Maintenance and Inspection

5.1 Section Safety

⚠ WARNING

Never touch high-voltage terminals in the power regenerative unit.

Failure to observe this warning can result in an electric shock.

Perform maintenance or inspection only after verifying that the CHARGE LED goes OFF, after the main circuit power supply is turned OFF.

The capacitors are still charged and can be dangerous.

Only authorized personnel should e permitted to perform maintenance, inspections or parts replacement.

[Remove all metal objects (watches, bracelets, etc.) before operation.] (Used tools which are insulated against electric shock.) Failure to observe this warning can result in an electric shock.

Never modify the product.

Failure to observe this warning can result in an electric shock or personal injury and will invalidate the guarantee.

⚠ CAUTION

The power regenerative unit employs semi-conductor elements. Do not touch the CMOS elements.

They are easily damaged by static electricity.

Do not connect or disconnect wires or connectors while power is applied to the circuit.

Failure to observe this caution can result in personal injury.

5.2 Periodic Inspection and Maintenance

The maintenance period of the power regenerative unit is as follows.

Maintenance period: Within 18 month of shipping from the factory or within 12 months of being delivered to the final user, whichever comes first.

♦ Daily Inspection

Check the following items with the system in operation.

- There should be no abnormal heat generation.
- The ambient temperature should not be too high.
- The cooling fan on the power regenerative unit should be operating normally.

♦ Periodic Inspection

Check the following items curing periodic maintenance.

Always turn OFF the power supply before beginning inspection. Confirm that the LED indicators on the front cover have all turned OFF, and then wait at least five minutes have elapsed before beginning the inspection. Be sure not to touch terminals right after the power has been turned OFF. Doing so can result in an electric shock.

Table 5.1 Period Inspections

Item	Inspection	Corrective Procedure
External terminals, mounting bolts, connectors, etc.	Are all screws and bolts tight?	Tighten loose screws and bolts firmly.
	Are connectors tight?	Reconnect the loose connectors.
Heatsink	Are the fins dirty?	Clean off any dirt and dust with an air gun using dry air at a pressure of 39.2×10^4 Pa (4 to 6 kg•cm^2)
PCBs	Is there any conductive dirt or oil mist on the PCBs?	Clean off any dirt and dust with an air gun using dry air at a pressure of 39.2×10^4 Pa (4 to 6 kg•cm^2). Replace the boards if they cannot be made clean.
Cooling fan	Is there any abnormal noise or vibration or has the total operating time exceeded 20,000 hours? **<1>**	Replace the cooling fan.
Power elements	Is there any conductive dirt or oil mist on the elements?	Clean off any dirt and dust with an air gun using dry air at a pressure of 39.2×10^4 Pa (4 to 6 kg•cm^2)
Smoothing capacitor	Are there any irregularities, such as discoloration or odor?	Replace the capacitor or power regenerative unit.

<1> Unit power must be ON to perform this check.

♦ Periodic Maintenance of Parts

The power regenerative unit is configured of many parts, and these parts must be operating properly in order to make full use of its functionality.

Among the electronic components, there are some that require maintenance depending on their usage conditions. In order to keep the power regenerative unit operating normally over a long period of time, it is necessary to perform period inspections and replace parts according to their service life.

When replacing parts, be careful not to drop any, such as screws, inside the RC5. Failure to observe this caution may result in a short-circuit and a fire.

Periodic inspection standards vary depending the installation environment and usage conditions of the power regenerative unit. The power regenerative unit's maintenance periods are noted below. Keep them as reference.

Table 5.2 Part Replacement Guidelines

Part	Standard Replacement Period	Replacement Method
Smoothing capacitor	5 years	Replace with new part. (Determine need by inspection.)
Breaking relays	–	Determine need by inspection.
Fuses	10 years	Replace with new part.
Aluminum capacitors on PCBs	5 years	Replace with new board. (Determine need by inspection.)

Note: Usage conditions are as follows: • Ambient temperature: Yearly average of 30°C • Load factor: 80% max. • Operating rate: 12 hours max. per day.

This page intentionally blank.

6

Troubleshooting

6.1 Fault Detection

When the power regenerative unit detects a fault, the fault code is displayed on the Digital Operator and the fault contact output operates.

When a fault has occurred, refer to the following table to identify and correct the cause of the fault.

Use one of the following methods to reset the fault after restarting the power regenerative unit.

- Turn ON the fault reset signal.
- Press the RESET Key on the Digital Operator.
- Turn the main circuit power supply OFF and then ON again.

Table 6.1 Fault Displays and Processing

Fault Display	Meaning	Probable Causes	Corrective Actions
PUF IGBT, Fuse Failure	Fuse Blown The fuse in the main circuit is blown. The main transistor has damaged.	The output transistor has failed because of a short-circuit or overcurrent.	Replace the power regenerative unit after correcting the cause.
UV1 DC Bus Undervolt	Main Circuit Undervoltage The main circuit DC voltage is below the undervoltage detection level (L2-05). 200 V class: Approx. 190 VDC 400 V class: Approx. 380VDC	• An open-phase occurred with the input power supply. • A momentary power loss occurred. • The wiring terminals for the input power supply are loose.	Reset the fault after correcting its cause.
UV2 CTR PS Undervolt	Control Power Fault The control power supply voltage dropped.	_____	• Try turning the power supply off and on. • Replace the power regenerative unit if the fault continues to occur.
UV3 MC Answerback	Inrush Prevention Circuit Fault A fault occurred in the inrush prevention circuit.	_____	• Try turning the power supply off and on. • Replace the power regenerative unit if the fault continues to occur.
AUv Ac Undervoltage	AC Power Undervoltage AC power undervoltage occurred during running. 200 V class: Approx. 150 VAC or less 400 V class: Approx. 300 VAC or less	• An open-phase occurred with the input power supply. • A momentary power loss occurred • The wiring terminals for the input power supply are loose.	Reset the fault after correcting its cause.
FdVe Power F Fault	Power Supply Frequency Fault AC power supply frequency has exceeded the setting value (F1-10).	• The power supply fluctuations occurred during running. • Power loss occurred during running.	Reset the fault after correcting its cause.
SrC Power Supply Flt	Power Supply Fault The phase of the input power supply has changed after turning ON the control power supply.	• An open-phase occurred with the input power supply. • A momentary power loss occurred. • The wiring terminals for the input power supply are loose.	Reset the fault after correcting its cause
OC Over Current	Overcurrent The output current of the power regenerative unit exceeded the overcurrent detection level. (200% of rated current)	• A short-circuit occurred at the power regenerative output. • Power supply drop • Faulty wiring	Reset the fault after correcting its cause.
SC Short Circuit	IGBT Short-circuit The IGBT gate signal was short-circuited.	A short-circuit of the PWM signal occurred.	Replace the control card.
OV Dc Bus Overvolt	Main Circuit Overvoltage The main circuit DC voltage exceeded the Overvoltage detection level. 200 V class: Approx. 400 VDC 400 V class: Approx. 800 VDC	The deceleration time is too short and the regenerative energy from the motor is too large.	• Increase the deceleration time. • Check the capacity of the power regenerative unit. • (Increase the capacity.)
		The power supply voltage is to high.	Decrease the voltage so it is within specifications.
OH Heatsink Overtemp	Heatsink Overheating The temperature of the power regenerative unit's cooling fins exceeded the setting in L8-02. (Stopping method can be changed by L8-03.)	The ambient temperatur is too high.	Install a cooling unit.
		There is a heat source nearby.	Remove the heat source.
		The cooling fan of the power regenerative unit has stopped.	Replace the cooling fan. (Contact your sales representative.)

Fault Display	Meaning	Probable Causes	Corrective Actions
OH1 Heatsink Max temp	Heatsink Overheating The temperature of the power regenerative unit's cooling fins exceeded 105˚C. (Stopping method: Coast to stop)	The ambient temperatur is too high.	Install a cooling unit.
		There is a heat source nearby.	Remove the heat source.
		The cooling fan of the power regenerative unit has stopped.	Replace the cooling fan. (Contact your sales representative.)
OL Input Over Loaded	Power Regenerative Unit Input Overload Power regenerative unit input exceeded the overload capacity.	The load is too heavy.	Check the size of the load.
EF3 External Fault 3	External fault (terminal S3-SC)	An external fault was input from a multi-function input.	Reset external fault inputs to the multi-function inputs. Remove the cause of the external fault.
EF4 External Fault 4	External fault (terminal S4-SC)		
OPR Oper Disconnect	Operator Connection Fault The operator was disconnected during operation started by a run command from the Operator	_____	Check the Operator connection.
ERR EEPROM R/W Err	EEPROM Write Error	_____	A verification error occurred when wiring EEPROM. Try turning the power supply off and on again. Try setting the constants again.
CPF00 COM-ERR (OP&CONV)	Control Circuit Error 1 (Operator Communications Error)	Communications with the digital operator were not established within 5 seconds after the power was turned on. MPU peripheral element check fault.	Disconnect the digital operator and then connect it again. Check the wiring of the control circuit power supply. Replace the control card.
CPF01 COM-ERR (OP&CONV)	Control Circuit Error 2 (Operator Communications Error)	After communications were established, there was a transmission error with the digital operator for more than 2 seconds. MPU peripheral element check fault	Disconnect the digital operator and then connect it again. Check the wiring of the control circuit power supply. Replace the control card.
CPF02 BB Circuit Err	Baseblock Circuit Error	The control circuit is damaged.	Replace the control card.
CPF03 EEPROM Err	EEPROM Error		
CPF04 Internal A/D Err	CPU Internal A/D Converter Error		

6.2 Minor Fault Detection

Minor faults are a type of the protection function that do not operate with fault contact output and are automatically returned to their original status once the cause of the minor fault has been removed.

The Digital Operator display blinks.

Take appropriate countermeasures according to the table below.

Table 6.2 Minor Fault Displays and Processing

Minor Fault Display	Meaning	Probable Causes	Corrective Actions
UV Dc Bus Undervolt	Main Circuit Undervoltage The main circuit DC voltage was below the undervoltage detection level (L2-05.) 200 V class: Approx. 190 VDC or less 400 V class: Approx. 380 VDC or less	See causes for AUv, FdVe, SrC, and UV3 faults	——
OV Dc Bus Overvolt	Main Circuit Overvoltage The main circuit DC voltage exceeded the Overvoltage detection level. 200 V class: Approx. 400 VDC 400 V class: Approx. 800 VDC	The regenerative energy from the motor is too large.	Check the capacity of the power regenerative unit. (Increase the capacity.)
		The power supply voltage is too high.	Decrease the voltage so it is within specifications.
OH Heatsink Overtemp	Heatsink Overheating The temperature of the power regenerative unit's cooling fins exceeded the setting in L8-02. (Stopping method can be changed by L8-03.)	The ambient temperature is too high.	Install a cooling unit.
		There is a heat source nearby.	Remove the heat source.
		The cooling fan of the power regenerative unit has stopped.	Replace the cooling fan. (Contact your MAGNETEK representative.)
OL Input Over Loaded	Power Regenerative Unit Input Overload Power regenerative unit input exceeded the overload capacity.	The load is too heavy.	Check the size of the load.
EF3 External Fault 3	External fault (terminal S3-SC)	An external fault was input from a multi-function input.	• Reset external fault inputs to the multi-function inputs. • Remove the cause of the external fault.
EF4 External Fault 4	External fault (terminal S4-SC)		

6.3 Operation Errors

After the parameters have been set, an operation error will occur if there is an invalid setting or a contradiction between two parameter settings.

It won't be possible to start the power regenerative unit until the parameters have been set correctly. (The minor fault output and fault contact output will not operate, either.)

When an operation error has occurred, refer to the following table to identify and correct the cause of the errors.

Table 6.3 Operation Error Displays and Incorrect Settings

Display	Meaning	Incorrect settings
OPE01 kVA Selection	Incorrect Power Regenerative Unit Capacity Setting	The power regenerative unit capacity setting does not match the Unit. (Contact your MAGNETEK representative.)
OPE02 Limit	Parameter Setting Range Error	The parameter setting is outside of the valid setting range.
OPE03 Terminal	Multi-function Input Selection Error	The same setting has been selected for two or more multi-function inputs (H1-01, H1-02)

This page intentionally blank.

7

Specifications

Note:
1. Consult the factory if connecting more than one inverter to one power regenerative unit.
2. Heavy duty applications require continuous energy dissipation (100% braking torque). The overload rating is 125% for 60 seconds with a duty cycle of 25%. Braking torque of 187.5% is available for 30 seconds. Please note the peak torque should be less than 250%.
3. Standard duty applications require intermittent full energy dissipation. The continuous rating is 80% or less braking torque and 100% braking torque for 60 seconds with a duty cycle of 25% (60 seconds maximum on-time of every 240 seconds). The overload rating is 150% braking torque for 30 seconds. Please note the peak torque should be less than 200%.
4. Do not use this unit with single-phase power. Use three-phase power.
5. Imbalance rate between phases can be calculated using the following formula (Conforming to IEC1800-3). Imbalance rate between phases [%] = Three-phase

Table 7.1 200 V Class Specifications

Model CIMR-R5U				2015	2022	2030	2037
Rating	Rated Capacity	Heavy Duty (See Note 2)	HP (kW)	15 (11)	25 (18.5)	30 (22)	40 (30)
			Rated Current on Input Side (100% Cont)	32	48	64	80
		Standard Duty (See Note 2)	HP (kW)	20 (15)	30 (22)	40 (30)	50 (37)
			Rated Current on Input Side (100% Cont)	40	60	80	100
	Rated DC Current A			51	77	102	126
	Regenerative Torque			100%, 125% for 60 sec (25% ED), 187.5% for 30 sec, max torque <250%			
Input Power Supply	Voltage Frequency			200 to 220 Vac @ 50 Hz, 200 to 230 Vac @ 60 Hz			
	Allowable Voltage Fluctuation			+ 10 to -15% (Imbalance rate between phases: within 2%) **<Note 5>**			
	Allowable Frequency Fluctuation			± 3 Hz (3 Phase rotation)			
Control Characteristics	Control Method			120˚ current conduction			
	Input Power Factor			0.9 or more (Rated Current)			
	Overload Capacity			187.5% for 30 seconds			
	Programmable Input/Output			2-Digital Inputs, 2-Digital Outputs, 1-Analog Output			
Operation Input				External Terminals			
Status Output	Fault			IC contact output			
	Running, READY signal			Photocoupler output			
	Analog Output			1 point can be selected (current monitor)			
Protective Functions (shutdown levels)	Instantaneous Overcurrent			>250% of the current on the power side			
	Fuse Protection			Blown fuse			
	Overload (Current)			>30 seconds at 187.5% of rated current			
	Undervoltage (DC Voltage)			<190 Vdc			
	Undervoltage (Power Side Voltage)			<150 Vac			
	Overload (DC Voltage			>400 Vdc			
	Thermal			Internal Thermistor			
	Power Supply			Phase Loss Detection			
	Power Frequency Error			Fluctuations > ± 3 Hz of Rated Input Frequency			
	Power Charge Indication			> 50 V Output Voltage			
Environmental Conditions	Location			Indoor (protected from dust and gases)			
	Ambient Temperature Location			-10˚C to +40˚C (Closed wall-mounted) -10˚C to +45˚C (Open chassis type)			
	Humidity			<90% RH (non-condensing)			
	Vibration			9.8 m/s^2 (1G) less than 20Hz, up to 1.96 m/s^2 (0.2 G) at 20-50 Hz			

Table 7.2 400 V Class Specifications

Model CIMR-R5U				4030	4045	4055	4075
Rating	Rated Capacity	Heavy Duty (See Note 2)	HP (kW)	30 (22)	50 (37)	60 (45)	75 (55)
			Rated Current on Input Side (100% Cont)	32	48	60	80
		Standard Duty (See Note 2)	HP (kW)	40 (30)	60 (45)	75 (55)	100 (75)
			Rated Current on Input Side (100% Cont)				
	Rated DC Current A			51	77	96	128
	Regenerative Torque			100%, 125% for 60 sec (25% ED), 187.5% for 30 sec, max torque <250%			
Input Power Supply	Voltage Frequency			380 to 460VAC 50/60 Hz			
	Allowable Voltage Fluctuation			+ 10 to -15% (Imbalance rate between phases: within 2%) **<Note 1>**			
	Allowable Frequency Fluctuation			± 3 Hz (3 Phase rotation)			
Control Characteristics	Control Method			120˚ current conduction			
	Input Power Factor			0.9 or more (Rated Current)			
	Overload Capacity			187.5% for 30 seconds			
Operation Input				External Terminals			
Status Output	Fault			IC contact output			
	Running, READY signal			Photocoupler output			
	Analog Output			1 point can be selected (current monitor)			
Protective Functions (shutdown levels)	Instantaneous Overcurrent			>250% of the current on the power side			
	Fuse Protection			Blown fuse			
	Overload (Current)			>30 seconds at 187.5% of rated current			
	Undervoltage (DC Voltage)			<380 Vdc			
	Undervoltage (Power Side Voltage)			<300 Vac			
	Overload (DC Voltage			>800 Vdc			
	Thermal			Internal Thermistor			
	Power Supply			Phase Loss Detection			
	Power Frequency Error			Fluctuations > ± 3 Hz of Rated Input Frequency			
	Power Charge Indication			> 50 V Output Voltage			
Environmental Conditions	Location			Indoor (protected from dust and gases)			
	Ambient Temperature Location			-10˚C to +40˚C (Closed wall-mounted) -10˚C to +45˚C (Open chassis type)			
	Humidity			<90% RH (non-condensing)			
	Vibration			9.8 m/s^2 (1G) less than 20Hz, up to 1.96 m/s^2 (0.2 G) at 20-50 Hz			

Note: Use a power regenerative unit with larger output capacity if the imbalance rate between phases exceeds 2%.
Note: <1> Imbalance rate between phases can be calculated using the following formula (Conforming to IEC1800-3).
Imbalance rate between phases
[%] = Three-phase average voltage divided by (Max. voltage -Min. voltage) x 67.

This page intentionally blank.

A

Parameter List

Table A.1 shows the items that can be monitored in operation mode. The output signal levels for multi-function analog outputs shown in the table are for a gain of 100.0 and a bias of 0.00.

Table A.1 Parameters Monitored in Operation Mode

Function	Parameter No.	Parameter Name / Display	Function	Output Signal Level for Multi-function Analog Outputs	Min. Unit
Status Monitor	U1-02	DC bus voltage DC Bus Voltage	Monitors the DC voltage of the power regenerative unit's internal main circuit	200 V class: 400 V/10 V 400 V class: 800 V/10 V (0 to +10 V Output)	1V
	U1-04	AC power supply voltage AC Voltage	Monitors the AC power supply voltage	200 V class: 400 V/5 V 400 V class: 800 V/5 V (0 to +10 V Output)	1V
	U1-05	Current at power side AC Current	Monitors the AC power supply current	Rated current /10V (0 to +10 V Output)	1A
	U1-07	Power at power side AC Power	Monitors the AC power supply power.	Rated power /10 V (0 to +10 V Output)	1kW
	U1-08	AC power supply frequency AC Frequency	Monitors the AC power supply frequency.	60 Hz /10 V (0 to +10 V Output)	0.01 Hz
	U1-10	Input terminal status Input Term Sts	Shows input ON/OFF Status. Shows input ON/OFF status. U1-10 = 00000000 1: MANUAL RUN (terminal S1) ON 1: AUTO RUN (terminal S2) ON 1: EXFLT (terminal S3) ON <1> 1: RESET (terminal S4) ON <1> 1: Not used. (always 0) <1>: Can be selected by H1-01 or H1-02.	(Cannot be output)	—
	U1-11	Output terminal status Output Term Sts	Shows output ON/OFF Status. U1-10 = 00000000 0: Not used. (always 0) 1: Multi-function output 1 (terminals M1-M2) ON <2> 1: Multi-function output 2 (terminals M3-M4) ON <2> 0: Not used. (always 0) 1: Fault output (terminal MA/MB-MC) ON <2>: Can be selected by H2-02 or H2-03.		—
	U1-12	Operation status Int Ct1 Sts 1	Shows input ON/OFF Status. Shows input ON/OFF status. U1-10 = 00000000 1: Running 0: Not used. (always 0) 1: Reset input ON 0: No used. (always 0) 1: Power regenerative unit ready 0: Minor fault detected 1: Major fault detected		—
	U1-13	Cumulative operation time Elapsed Time	Monitors the power regenerative unit's elapsed operation time. Can be set with parameter o2-07 or o2-08.		—
	U1-14	Software No. FLASH ID	(Manufacturer's ID number)		—
	U1-21	Voltage deviation V Deviation	Monitors the deviation between the AC power supply voltage and the main circuit DC voltage.	200 V class: 400 V/10 V 400 V class: 800 V/10 V	1 V
	U1-28	Software No. (CPU) CPU ID	(Manufacturer's ID number)	(Cannot be output)	—

Function	Parameter No.	Parameter Name / Display	Function	Output Signal Level for Multi-function Analog Outputs	Min. Unit
Fault Trace	U2-01	Current Fault Current Fault	Information on the current fault	(Cannot be output)	___
	U2-02	Last Fault Last Fault	Information on the last fault		___
	U2-04	DC bus voltage at fault DC Bus Voltage	Main circuit DC voltage value when the “last fault” occurred.		1 V
	U2-06	Power supply voltage at fault AC Voltage	AC power supply voltage valued when the “last fault” occurred.		1 V
	U2-07	Power side current at fault AC Current	Current value at AC power side when the “last fault” occurred.		1 A
	U2-08	Power at fault AC Power	Power at AC power side when the “last fault” occurred.		1 kW
	U2-10	Power side frequency at fault AC Frequency	Frequency at AC power side when the “last fault” occurred.		0.01 Hz
	U2-11	Input terminal status at fault Input Term Sts	Input terminal status when the “last fault” occurred. (Same format as U1-10.)		___
	U2-12	Output terminal status at fault Output Term Sts	Output terminal status when the “last fault” occurred. (Same format as U1-11.)		___
	U2-13	Operation status at fault Regen Unit Sts	Operating status when the “last fault” occurred. (Same format as U1-12.)		___
	U2-14	Cumulative operation time at fault Elapsed Time	Elapsed operating or power-on time when the “last fault” occurred.		1 H
Fault History	U3-01	Most recent fault Last Fault	Information on the last fault.		___
	U3-02	Second most recent fault Fault Message 2	Information on the 2nd to last fault.		___
	U3-03	Third most recent fault Fault Message 3	Information on the 3rd to last fault.		___
	U3-04	Fourth/oldest fault Fault Message 4	Information on the 4th to last fault.		___
	U3-05	Cumulative operation time at fault Elpased Time 1	Elapsed running or power-on time when the last fault occurred.		1 H
	U3-06	Accumulated time of second fault Elapsed Time 2	Elapsed running or power-on time when the 2nd to last fault occurred.		1 H
	U3-07	Accumulated time of third fault Elapsed Time 3	Elapsed running or power-on time when the 3rd to last fault occurred.		1 H
	U3-08	Accumulated time of fourth/oldest fault Elapsed Time 4	Elapsed running or power-on time when the 4th to last fault occurred.		1 H

Table A.2 Parameter List

Parameter No.	Parameter Name Display	Setting Range	Factory Setting	Change during Operation	Access Level	Description
A1-00	Language selection for operator display [Select Language]	0, 1	0	O	A	Language selection for the Digital Operator. This parameter is not reset to the factory setting by A1-03. 0: English 1: Japanese
A1-01	Parameter access level [Access Level]	0 to 9999	4	O	A	Selects which parameters are accessible via the Digital Operator. 0: Operation only 4: Advanced Level
A1-03	Initialize [Init Parameters]	0000 to 9999	0000	x	A	Used to return all parameters to their factory or user default settings. (Initializes and then returns A1-03 to zero.) 2220: 2-Wire Initialization
A1-04	Password 1 (Input) [Enter Password]	0000 to 9999	0	x	A	When the value set into A1-04 does NOT match the value set into A1-05, parameters A1-01 thru A1-03 cannot be changed. All other parameters as determined by A1-01 can be changed. Parameter A1-05 can be accessed by pressing the MENU key while holding the RESET key.
b1-02	Operation method selection [Run Source]	0, 1	1	x	A	Selects the fun command input source. 0: Operator- RUN and STOP keys on Digital Operator. 1: Terminals – Contact closure on terminals S1 or S.
b1-06	Read sequence input twice [Cntl Input Scans]	0, 1	1	x	A	Sets the scan rate of terminals S1 to S4 0: 500 ms – 2 scans (for quick response) 1: 5 ms – 2 scans (for noisy environments)
C8-17	Automatic operation stop current [Autorun Iout]	10 to 100%	50	x	A	____
C8-18	Bias voltage at operation start [V Bias of Run]	0.0 to 50.0 V	2.0	x	A	For 400 V class power regerative units, double the initial setting and setting range.
C8-19	Hysteresis voltage width at operation start/stop [V Width of Stop]	0.5 to 50.0 V	3.0	x	A	For 400 V class power regenerative units, double the initial setting and setting range.
C8-20	Min. operating time [Minimum Run Time]	0.0 to 600.0 sec	1.0	x	A	____
F1-10	Excessive frequency deviation detection level [FDEV DetectLevel]	1.0 to 10.0 Hz	3.0	x	A	Configures the frequency deviation fault (DEV) detection. DEV fault will occur if the frequency deviation if greater than the F1-10 setting for a time longer than F1-11. F1-10 is set as a percentage of the maximum output frequency (E1-04). Frequency deviation is the difference between actual input supply frequency and the frequency reference command.
F1-11	Excessive frequency deviation detection delay time [FDEV Detect Time]	0.0 to 255.0 sec	70.0	x	A	
H1-01	Multi-function input (terminal S3) [Terminal S3 Sel]	0 to 2F	24	O	A	Selects the function of terminal S3. 24: External fault, Normally Open, Always Detected, Coast To Stop. Refer to ***Table A.3***.
H1-02	Multi-function input (terminal S4) [Terminal S4 Sel]	0 to 2F	14	O	A	Selects the function of terminal S4. 14: Fault reset Closed = Resets the Drive after the fault and the run command have been removed. Refer to ***Table A.3***.
H2-02	Multi-function output (terminal M1-M2) [Terminal M1 Sel]	0 to 20	6	O	A	Selects the function of terminals M1 to M2. 6: Drive ready Closed – When the Drive is powered up, not in a fault state and in the DRIVE mode. Refer to ***Table A.4***
H2-03	Mutli-function output (terminal M3-M4) [Terminal M3 Sel]	0 to 20	0	O	A	Selects the function of terminals M2-M4. 0: During Run 1 Closed – When a run command is input or the Drive is outputting voltage. Refer to ***Table A.4***.

Parameter No.	Parameter Name Display	Setting Range	Factory Setting	Change during Operation	Access Level	Description
H4-01	Multi-function AO (terminal AM-AC) [Terminal AM Sel]	0 to 21	5	O	A	Selects which monitor will be output on terminals AM and AC. 0: Not used 2: DC bus voltage (U1-02) 4: AC power supply voltage (U1-04) 5: Current at power side (U1-05) 7: Power at power side (U1-07) 8: AC power supply frequency (U1-08) 21: Voltage deviation (U1-21) Refer to ***Table A.5***.
H4-02	Gain (terminal AM-AC) [Terminal AM Gain]	0.00 to 2.50	0.50	O	A	Sets terminal AM output level when selected monitor is at 100%
H4-03	Bias (terminal AM-AC) [Terminal AM Bias]	-110.0 to +110.0%	0.0	O	A	Sets terminal AM output level when selected monitor is at 0%
H4-07	Analog output signal polarity selection [AM Level Select]	0, 1	1	O	A	Selects the signal level of terminal AM. 0: 0 to 10 Vdc 1: -10 to +10 Vdc
L2-01	Momentary power loss detection [PwrL Selection]	0 to 2	0	x	A	Enables and disables the momentary power loss function. 0: Disabled – Unit trips on (UV1) fault when power is lost. 1: POWER Loss Ride Thru Time – Unit will restart if power returns within the time set in L2-02.* 2: CPU Power Active – Unit will restart if power returns prior to control power supply shut down.* * In order for a restart to occur, the run command must be maintained throughout the ride thru period.
L2-02	Momentary power loss ridethru time [PwrL Ridethru t]	0.0 to 2.0	2.0	x	A	Sets the power loss ride-thru time. This value is dependent on the capacity of the Unit. Only effective when L2-01 = 1.
L2-05	Undervoltage detection level [PUV Det Level]	150 to 210 V	190	x	A	Sets the Unit's DC Bus undervoltage trip level. If this is set lower than the factory setting, additional AC input reactance or DC bus reactance may be necessary. Consult the factory before changing this parameter setting.
L5-01	Number of auto restart attempts [Num of Restarts]	0 to 10	0	x	A	Sets the counter for the numbers of times the Unit will perform an automatic restart. Auto restart will check to see if the fault has cleared every 5 ms. When no fault is present, the Unit will attempt an auto restart. If the Unit faults after an auto restart attempt, the counter is incremented. When the Unit operates without fault for 10 minutes, the counter will reset to the value set in L5-01.
L5-02	Auto restart operation selection [Restart Sel]	0, 1	0	x	A	Determines if the fault contact activates during an automatic restart attempt. 0: No Fault Relay – fault contact will not activate during an automatic restart attempt. 1: Fault Relay Active – fault contact will activate during an automatic restart attempt.
L8-02	Overheat pre-alarm level [OH Pre-Alarm Lvl]	50 to 110 deg	95	x	A	When the cooling fin temperature exceeds the value set in this parameter, an overheat alarm (OH) will occur.
L8-03	Operation selection after overheat pre-alarm [OH Pre-Alarm Sel]	1, 3	3	x	A	Selects the Unit operation upon an OH pre-alarm detection. 1: Coast to Stop 3: Alarm Only
L8-07	Power supply open-phase protection selection [Ph Loss In Sel]	0, 1	0	x	A	Selects the detection of output current open-phase. When applied motor capacity is too small for Unit capacity, output phase loss may be detected inadvertently. In this case, set to 0. 0: Disabled 1: Enabled
o1-01	Monitor Selection [User Monitor Sel]	4 to 8	8	O	A	Selects which monitor will de displayed in the operation menu upon power-up when o1-02 = 4. 4: Power supply voltage (U1-04) 7: Power at power side (U1-07) 8: Power supply frequency (U1-08)

Parameter No.	Parameter Name Display	Setting Range	Factory Setting	Change during Operation	Access Level	Description
o1-02	Monitor selection after power up [Power-On Monitor]	2 to 4	2	O	A	Selects which monitor will be displayed upon power-up. 2: DC Bus Voltage (U1-02) 3: Output Current at the power side (U1-05) 4: Monitor set in o1-01
o2-01	LOCAL/REMOTE key enable/disable [Local/Remove Key]	0, 1	1	x	A	Determines if the Digital Operator Local / Remote key is functions. 0: Disabled 1: Enabled
o2-02	STOP key during remote operation [Oper STOP Key]	0, 1	0	x	A	Determines if the STOP key on the Digital Operator will stop the Unit when the Unit is operating from external terminals. 0: Enabled during run command from the digital operator 1: Enabled
o2-04	kVA selection [Regen Unit Model]	00 to FF	*	x	A	Sets the kVA of the Unit. Enter the number based on the Unit model number. Use the last four digits of the model number. See chart below for valid codes. This parameter only needs to be set when installing a new control board. Do not change for any other reason.
o2-06	Operation selection when digital operator is disconnected [Oper Detection]	0, 1	0	x	A	Determines if the Unit will stop when the Digital Operator is removed when in LOCAL mode of b1-02 = 0. 0: Disabled – the Unit will not stop when the Digital Operator is removed. 1: Enables – The Unit will fault (OPR) and coast to stop when the Digital Operator is removed.
o2-07	Cumulative operation time setting [Elapsed Time Set]	0 to 65535H	___	x	A	Sets the initial value of the elapsed operation timer U1-13.
o2-08	Cumulative operation time selection [Elapsed Time Run]	0, 1	0	x	A	Sets how time is accumulated for the elapsed operation timer U1-13. 0: Power-On Time- Time accumulates when the Unit is powered. 1: Running Time – time accumulates only when the Unit is running.

*Model Code

2015	08
2022	0A
2030	0B
2037	0C
4030	2C
4045	2E
4055	2F
4075	30

Parameter o2-04 valid codes

Table A.3 Multi-function Input Functions

Setting Value	Function (H1-01, 02)	Remarks
8	External baseblock (NO contact) [Ext BaseBlk N.O.]	
9	External baseblock (NC contact) [Ext BaseBlk N.C.]	
F	Not used [Term Not Used]	
14	Fault reset [Fault Reset]	
24-2F	External fault [External Fault]	24: External Fault, Normally Open, Always Detected, Coast To Stop 25: External Fault, Normally Closed, Always Detected, Coast To Stop 26: External Fault, Normally Open, During Run, Coast To Stop 27: External Fault, Normally Closed, During Run, Coast To Stop 28: External Fault, Normally Open, Always Detected, Fast Stop 29: External Fault, Normally Closed, Always Detected, Fast Stop 2A: External Fault, Normally Open, During Run, Fast Stop 2B: External Fault, Normally Closed, During Run, Fast Stop 2C: External Fault, Normally Open, Always Detected, Alarm Only 2D: External Fault, Normally Closed, Always Detected, Alarm Only 2E: External Fault, Normally Open, During Run, Alarm Only 2F: External Fault, Normally Closed, During Run, Alarm Only

Table A.4 Multi-function Output Functions

Setting Value	Function (H1-01, 02)	Remarks
0	During run [During RUN 1]	Closed = When a run command is input or the Unit is outputting voltage.
6	Regenerative unit ready [Regen Unit Ready]	Closed = When the Unit is powered up, not in a fault state, and in the DRIVE mode.
7	During DC bus undervoltage (UV) detection [DC Bus Undervolt]	Closed = When the DC bus voltage falls below the UV trip level set in L2-05.
8	During Baseblock [BaseBlk 1]	Closed = When the Unit is not outputting voltage.
A	During MCON [Mc On]	Closed = When the pre-charge contactor contact is energized.
E	Fault [Fault]	Closed = When the Unit experiences a major fault.
F	Not used [Not Used]	
10	Alarm [Minor Fault]	Closed = When the Unit experiences an alarm.
11	Fault reset command active [Reset Cmd Active]	Closed = When the Unit receives a reset command from a digital input terminal or serial communication.
1E	Restart enabled [Restart Enabled]	Closed = When the Unit is performing an automatic restart attempt. Automatic restart is configured by parameter L5-01.
1F	Overload (OL1) pre-alarm [Overload (OL1)]	Closed = When OL1 is 80% of its trip point or greater.
20	Overheat pre-alarm [OH Prealarm]	Closed = When the Unit's heatsink temperature exceeds the setting of parameter L8-02.

Table A.5 Multi-function Analog Output Functions

Setting Value	Function (H1-01, 02)	Output signal level	Remarks
0	Not used [Not Used]		
2	DC bus voltage [DC Bus Voltage]	200 V class: 400 V/10V 400 V class: 800 V/10V	100% = 400 / 800 Vdc depending on the Unit voltage rating.
4	Power supply voltage [AC Voltage]	200 V class: 200 V/5 V 400 V class: 400 V/5 V (0 to +10 V output)	100% = 400 / 800 Vdc depending on the Unit voltage rating.
5	Current at the power side [AC Current]	Rated current /10 V	100% = Unit current at the power side.
7	Power at power side [AC Power]	Rated power /10 V	100% = Unit power at the power side.
8	Power supply frequency [AC Frequency	60 Hz/10 V	100% = Unit power supply frequency.
21	Voltage deviation input [V Deviation]	200 V class: 400 V/10 V 400 V class: 800 V/10 V	100% = 400 / 800 Vdc depending on the Unit voltage rating.

B

Spare Parts List

Table B.1 Recommended RC5 Input Fuse

Voltage	Magnetek RC5 Kit Part Number	Input Fuse			Fuse Holder		
		Magnetek Part Number	Ferraz Part Number	Qty per Unit	Magnetek Part Number	Ferraz Part Number	Qty per Unit
200V Class	RC5-230-0400	05P00017-0600	A30QS80-4	3	05P00019-0175	P243	3
	RC5-230-0600	05P00017-0601	A30QS100-4	3	05P00019-0175	P243	3
	RC5-230-0800	05P00017-0602	A30QS150-4	3	05P00019-0175	P243	3
	RC5-230-1000	05P00017-0602	A30QS150-4	3	05P00019-0175	P243	3
400V Class	RC5-460-0400	05P00017-0603	A50P80-4	3	05P00019-0176	P243E	3
	RC5-460-0600	05P00017-0604	A50P100-4	3	05P00019-0176	P243E	3
	RC5-460-0750	05P00017-0605	A50P150-4	3	05P00019-0176	P243E	3
	RC5-460-1000	05P00017-0605	A50P150-4	3	05P00019-0176	P243E	3

Note: These fuses and fuse holders are made by FERRAZ

Table B.2 Recommended RC5 Power Coordination and Suppression Reactor Specifications

Voltage	Magnetek RC5 Kit Part No.	Power Coordination Reactor		Current Suppression	
		Magnetek Part No.	Inductor Specs	Magnetek Part No.	Inductor Specs
200V Class	RC5-230-0400	05P00620-0140	45A, 0.30mH	05P00620-0141	55A, 0.25mH
	RC5-230-0600	05P00620-0143	80A, 0.20mH	05P00620-0143	80A, 0.20mH
	RC5-230-0800	05P00620-0143	80A, 0.20mH	05P00620-0146	100A, 0.15mH
	RC5-230-1000	05P00620-0146	100A, 0.15mH	05P00620-0064	130A, 0.10mH
400V Class	RC5-460-0400	05P00620-0049	45A, 0.70mH	05P00620-0141	55A, 0.25mH
	RC5-460-0600	05P00620-0144	80A, 0.40mH	05P00620-0143	80A, 0.20mH
	RC5-460-0750	05P00620-0144	80A, 0.40mH	05P00620-0146	100A, 0.15mH
	RC5-460-1000	05P00620-0145	100A, 0.30mH	05P00620-0064	130A, 0.10mH

Table B.3 Recommended RC5 Surge Protector kit

Voltage	Magnetek RC5 Kit Part No.	MOV Surge Protector	
		Magnetek Part No.	MOV Specs
200V Class	RC5-230-0400	05P00241-0089	250V, 8/20us A, 1.2/50us V
	RC5-230-0600	05P00241-0089	250V, 8/20us A, 1.2/50us V
	RC5-230-0800	05P00241-0089	250V, 8/20us A, 1.2/50us V
	RC5-230-1000	05P00241-0089	250V, 8/20us A, 1.2/50us V
400V Class	RC5-460-0400	05P00241-0088	460V, 8/20us A, 1.2/50us V
	RC5-460-0600	05P00241-0088	460V, 8/20us A, 1.2/50us V
	RC5-460-0750	05P00241-0088	460V, 8/20us A, 1.2/50us V
	RC5-460-1000	05P00241-0088	460V, 8/20us A, 1.2/50us V

Table B.4 RC5 Inverter List

Voltage	Magnetek RC5 Kit Part No.	RC5 Inverter	
		Magnetek Part No.	Inverter Specs
200V Class	RC5-230-0400	CIMR-R5U20151A	230V, 15HP, 42A
	RC5-230-0600	CIMR-R5U20221A	230V, 25HP, 68A
	RC5-230-0800	CIMR-R5U20301A	230V, 30HP, 80A
	RC5-230-1000	CIMR-R5U20370A	230V, 40HP, 104A
400V Class	RC5-460-0400	CIMR-R5U40301A	460V, 30HP, 40A
	RC5-460-0600	CIMR-R5U40450A	460V, 50HP, 65A
	RC5-460-0750	CIMR-R5U40550A	460V, 60HP, 77A
	RC5-460-1000	CIMR-R5U40750A	460V, 75HP, 96A

Revision History

Document revision dates and revision numbers are provided on the bottom of the back cover.

MANUAL NO. TM7325
Published in USA Nov 2008 08-09

Date of publication — Date of original publication

Date of Publication	Rev. No.	Section	Revised Content
Oct 2008	-	-	First edition
Nov 2008	1	2	Added Reactor Dimensions and Mass
Apr 2009	2	B	Added Spare Parts List
Feb 2010	3	2.4, 3.2	Added RC5 enclosure to dimensions and Connection Diagram

MAGNETEK - RC5

Power Regenerative Unit

Instruction Manual

MAGNETEK - Elevator Products
W136 N4863 Campbell Drive
Menomonee Falls, Wi 53051
(800) 236-1705, FAX (262) 790-4142

MAGNETEK - Elevator Products - Europe
20 Drake Mews, Crownhill
MIlton Keynes, Bucks MK8 0ER UK
+44(0) 1908 261427, Fax +44(0) 1908 261674

MAGNETEK
ELEVATOR

In the event that the end user of this product is to be the military and said product is to be employed in any weapons systems or the manufacture thereof, the export will fall under the relevant regulations as stipulated in the Foreign Exchange and Foreign Trade Regulations. Therefore, be sure to follow all procedures and submit all relevant documentation according to any and all rules, regulations and laws that may apply.

Specifications are subject to change without notice for ongoing product modifications and improvements.

© 2010 MAGNETEK, INC. All rights reserved.

MANUAL NO. TM7325 Rev.4
Published in USA Jul 2010 07-10